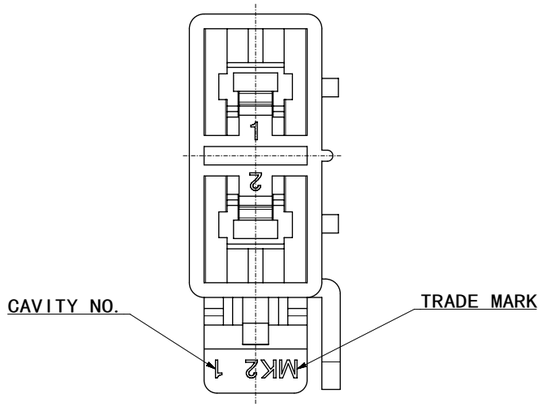

NOTE
1. MATERIAL & COLOR : SEE TABLE
2. MATED HOSUING : 35180-*40* / 35180-*60*
3. APPLICABLE TERMINAL : 35746-0*10
4. MATED TPA : 35965-029*
5. PRODUCT SPECIFICATION : PS 351800400 / 351800600
6. PACKAGING SPECIFICATION : PK-35965-001

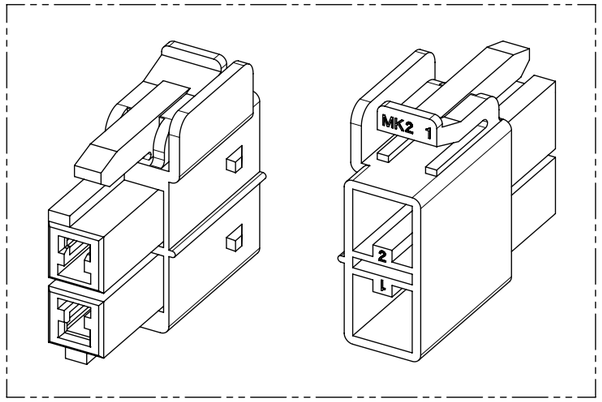

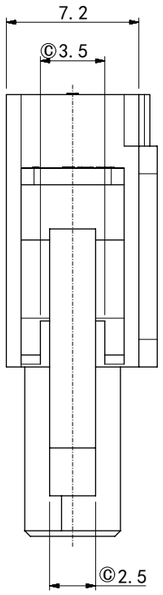

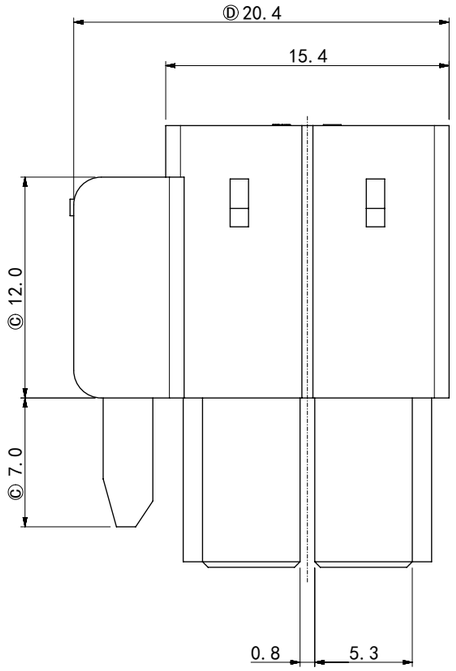

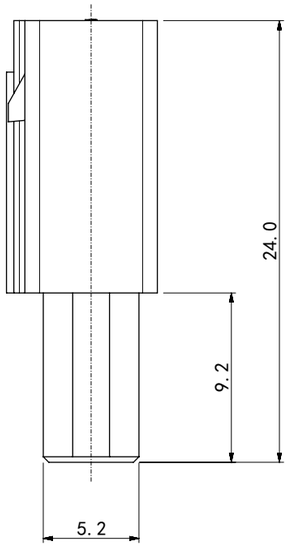

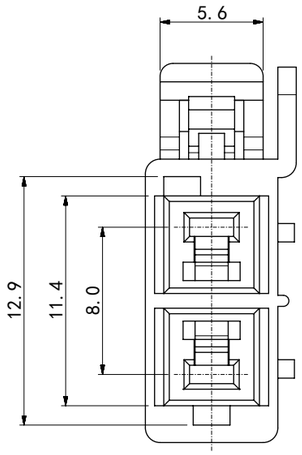

NO.	POLYESTER (PBT)	
	MATERIAL	COLOR
1	35965-0200	NATURAL
2	35965-0203	YELLOW
3	35965-0204	BLUE

SYMBOLS	
FA	= 0
FC	= 0
FD	= 0
S	= 0
▼	= 0
C	= 0
☒	= 0
■	= 0
▽	= 0

THIS DRAWING CONTAINS INFORMATION THAT IS PROPRIETARY TO MOLEX ELECTRONIC TECHNOLOGIES, LLC AND SHOULD NOT BE USED WITHOUT WRITTEN PERMISSION

DIMENSION UNITS	SCALE
mm	3:1

GENERAL TOLERANCES (UNLESS SPECIFIED)

ANGULAR TOL	±	1.0°
4 PLACES	±	
3 PLACES	±	
2 PLACES	±	
1 PLACE	±	0.3
0 PLACES	±	0.3

DRAFT WHERE APPLICABLE MUST REMAIN WITHIN DIMENSIONS

CURRENT REV DESC:

EC NO: 177777
DRWN: JSSHIN 2018/06/07
CHK'D: SHCHU 2018/06/08
APPR: YSKIM02 2018/06/08

INITIAL REVISION:
DRWN: SCHONG03 2018/01/24
APPR: YSKIM02 2018/06/08

THIRD ANGLE PROJECTION | DRAWING: A3-SIZE | SERIES: 35965

molex

.070 MULTI FEMALE HSG -2P (A-TYPE)

PRODUCT CUSTOMER DRAWING

DOCUMENT NUMBER	DOC TYPE	DOC PART	REVISION
359650200	PSD	000	E

MATERIAL NUMBER	CUSTOMER	SHEET NUMBER
SEE TABLE	GENERAL MARKET	1 OF 1

DOCUMENT STATUS	P1	RELEASE DATE	2018/06/08 03:11:40

FORMAT: master-tb-prod-A3
REVISION: H
DATE: 2018/01/18