© – TE Connectivity. All Rights Reserved.

| PART NUMBER | REV | FIRST USED |
|---|---|---|
| 566379 – 1 | G | 1–471273–2 |

| REVISIONS | | | | | |
|---|---|---|---|---|---|
| P | LTR | DESCRIPTION | DATE | DWN | APVD |
| | G | REVISED PER ECR–22–157911 | 09NOV2022 | GK | GB |

566379

| TERMINAL NAME: | | SPLICE |
|---|---|---|
| | | 62194 |
| | | 62759 |
| TERM APPL SPEC 114–2088 | | |

| CRIMPING DATA | | | |
|---|---|---|---|
| – | CRIMP HEIGHT | WIRE SIZE | |
| – △3 | .047 ±002 | (2) #25 MAG | |
| – | – | – | |
| – | – | – | |
| – | – | | |
| CRIMP | SIZE | TYPE | RANGE |
| WIRE | .070 | | – 400–1600 CMA |
| INSUL | – | – | |
| FEED | APPL INST △1 8012 | SET UP GAGE NONE | LAYOUT SIM L63130 |
| WIRE STRIP LENGTH | – | | |

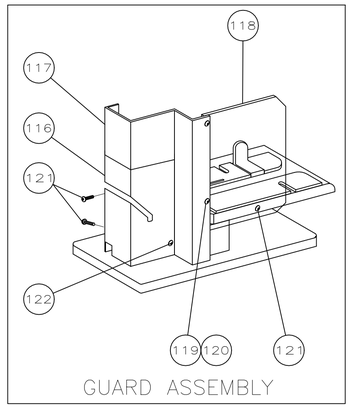


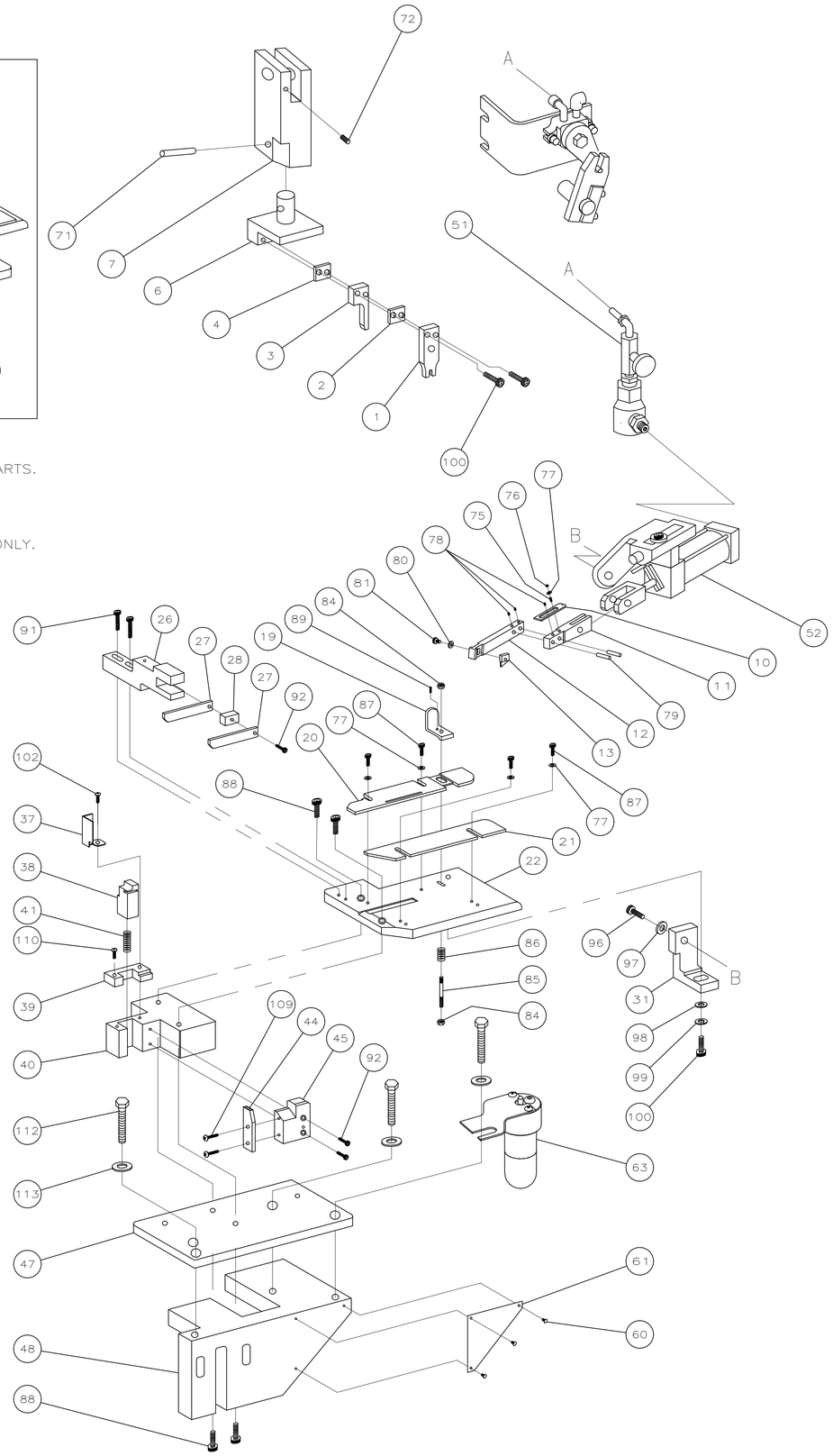


△1 RECOMMENDED SPARE PARTS.

△2 ITEMS NOT SHOWN.

△3 RECOMMENDED SET–UP ONLY.

| –1 | U/M | DWG SIZE | PART NO | DESCRIPTION | ITEM NO |
|---|---|---|---|---|---|
| △2 | 1 | – | B | 815933–1 | MOUNT, REEL BRACKET | 125 |
| △2 | 1 | – | B | 461903–1 | BRACKET, AIR SWITCH SHROUD | 124 |
| △2 | 1 | – | C | 461904–1 | SHROUD, AIR SWITCH | 123 |
| | 1 | – | A | 2–21002–2 | BHCS, 8–32 x .50 | 122 |
| | 5 | – | A | 2–21002–0 | BHCS, 8–32 x .25 | 121 |
| | 2 | – | A | 21018–4 | NUT, 4–40 | 120 |
| | 2 | – | A | 1–21002–3 | BHCS, 4–40 x .25 | 119 |
| | 1 | – | B | 816303–2 | SIDE GUARD | 118 |
| | 1 | – | D | 768494–1 | TOP GUARD | 117 |
| | 1 | – | B | 768562–1 | GUARD ASSEMBLY | 116 |
| | – | – | – | – | – | 115 |
| | – | – | – | – | – | 114 |
| | 3 | – | A | 371178 | BASE MOUNT WASHER | 113 |
| | 3 | – | A | 3–21015–1 | SCR, HEX HD 3/8–16 X 1.00 | 112 |
| | – | – | – | – | – | 111 |
| | 1 | – | A | 1–21002–9 | SCR, BHC 6–32 x .62 | 110 |
| | 2 | – | A | 2–21002–1 | SCR, BHC 8–32 X .38 | 109 |
| | – | – | – | – | – | 108 |
| | – | – | – | – | – | 107 |
| | – | – | – | – | – | 106 |
| | – | – | – | – | – | 105 |
| | – | – | – | – | – | 104 |
| | – | – | – | – | – | 103 |
| | 1 | – | A | 2–21002–4 | SCR, BHC 8–32 X .75 | 102 |
| | – | – | – | – | – | 101 |
| | 3 | – | A | 21001–6 | SCR, SHC 1/4–20 X 1.00 | 100 |
| | 1 | – | A | 21024–6 | WASHER, LOCK #1/4 | 99 |
| | 1 | – | A | 21055–8 | WASHER, FLAT #1/4 | 98 |
| | 1 | – | A | 21024–8 | WASHER, LOCK #3/8 | 97 |
| | 1 | – | A | 3–21001–6 | SCR, SHC 3/8–16 X 1.25 | 96 |
| | – | – | – | – | – | 95 |
| | – | – | – | – | – | 94 |
| | – | – | – | – | – | 93 |
| | 3 | – | A | 2–21000–8 | SCR, SHC 8–32 X .63 | 92 |
| | 2 | – | A | 3–21000–0 | SCR, SHC 8–32 X .88 | 91 |
| | – | – | – | – | – | 90 |
| | 1 | – | A | 3–21008–0 | SCR,SET SELF–LOC 6–32 X .32 | 89 |
| | 4 | – | A | 21001–3 | SCR,SHC 1/4–20 X .62 | 88 |
| | 4 | – | A | 2–21000–7 | SCR, SHC 8–32 X .50 | 87 |
| | 1 | – | A | 373469 | STOCK DRAG SPRING | 86 |
| | 1 | – | B | 370573 | DRAG STUD | 85 |
| | 2 | – | A | 21021–4 | NUT,HEX, SELF–LOC 10–32 | 84 |
| | – | – | – | – | – | 83 |
| | – | – | – | – | – | 82 |
| | 1 | – | A | 2–21000–6 | SCR, SHC 8–32 X .38 | 81 |
| | 1 | – | A | 21024–4 | WASHER, LOCK #8 | 80 |
| | 2 | – | A | 1–21030–5 | FEED FINGER PIN, DOWEL | 79 |
| | 3 | – | A | 1–21549–2 | SCR,SET 8–32 X .25 | 78 |
| | 5 | – | A | 21055–6 | WASHER, FLAT #8 | 77 |
| | 1 | – | A | 21018–6 | NUT, JAM 8–32 | 76 |
| | 1 | – | A | 4–21006–4 | SCR, SET 8–32 X .50 | 75 |
| | – | – | – | – | – | 74 |
| | – | – | – | – | – | 73 |
| | 1 | – | A | 2–21549–3 | SCR,SET SELF–LOC 1/4–20 X .50 | 72 |
| | 1 | – | A | 6–21029–9 | PIN,SLOTTED SPR .312 X 1.50 | 71 |

REVISION OF EACH ASSY NO (WHEN BLANK, USE DWG REVISION)

PARTS LIST

| –1 | U/M | DWG SIZE | PART NO | DESCRIPTION | ITEM NO |
|---|---|---|---|---|---|
| | – | – | – | – | 70 |
| | – | – | – | – | 69 |
| | – | – | – | – | 68 |
| | – | – | – | – | 67 |
| | – | – | – | – | 66 |
| | – | – | – | – | 65 |
| | – | – | – | – | 64 |
| | 1 | – | C | 465184–8 | LUBRICATOR ASSY | 63 |
| | | | | | | 62 |
| | 1 | – | B | 452373–1 | PLATE I.D. | 61 |
| | 3 | – | A | 21017–6 | SCR, RH DRIVE | 60 |
| | – | – | – | – | – | 59 |
| | – | – | – | – | – | 58 |
| | – | – | – | – | – | 57 |
| | – | – | – | – | – | 56 |
| | – | – | – | – | – | 55 |
| | – | – | – | – | – | 54 |
| | – | – | – | – | – | 53 |
| | 1 | – | B | 692653–1 | AIR FEED CYLINDER SUB–ASSY | 52 |
| | 1 | – | C | 692655–5 | AIR FEED VALVE SUB–ASSY | 51 |
| | – | – | – | – | – | 50 |
| | – | – | – | – | – | 49 |
| | 1 | – | C | 570238 | BASE MOUNT | 48 |
| | 1 | – | B | 465317–1 | BASE PLATE | 47 |
| | – | – | – | – | – | 46 |
| | 1 | – | B | 314893–2 | ANVIL HOLDER | 45 |
| △1 | 1 | – | C | 1–689722–1 | ANVIL | 44 |
| | – | – | – | – | – | 43 |
| | | | | | | 42 |
| | 1 | – | A | 387083 | SHEAR SPRING | 41 |
| | 1 | – | B | 314835–1 | BASE BLOCK | 40 |
| △1 | 1 | – | B | 314892–1 | SHEAR, PLATE | 39 |
| △1 | 1 | – | B | 314891–1 | SHEAR, FLOATING | 38 |
| | 1 | – | B | 314897–1 | SHEAR, DEFLECTOR | 37 |
| | – | – | – | – | – | 36 |
| | – | – | – | – | – | 35 |
| | – | – | – | – | – | 34 |
| | – | – | – | – | – | 33 |
| | – | – | – | – | – | 32 |
| | 1 | – | B | 815872–1 | BRACKET, FEED MOUNTING | 31 |
| | – | – | – | – | – | 30 |
| | – | – | – | – | – | 29 |
| | 1 | – | B | 692968–7 | SPACER, STRIPPER | 28 |
| | 2 | – | A | 314898–1 | STRIPPER | 27 |
| | 1 | – | B | 692875–4 | MOUNT, STRIPPER | 26 |
| | – | – | – | – | – | 25 |
| | – | – | – | – | – | 24 |
| | – | – | – | – | – | 23 |
| | 1 | – | B | 815932–1 | STRIP GUIDE PLATE | 22 |
| | 1 | – | B | 768959–1 | FRONT STRIP GUIDE | 21 |
| | 1 | – | B | 768490–1 | REAR STRIP GUIDE | 20 |
| | 1 | – | B | 387650–4 | DRAG, STOCK | 19 |
| | – | – | – | – | – | 18 |
| | – | – | – | – | – | 17 |
| | – | – | – | – | – | 16 |
| | – | – | – | – | – | 15 |
| | – | – | – | – | – | 14 |
| | 1 | – | A | 811645–1 | TIP, FEED FINGER | 13 |
| | 1 | – | B | 811644–1 | FINGER, FEED | 12 |
| | 1 | – | A | 810131 | ARM, FEED FINGER | 11 |
| | 1 | – | A | 374999 | TENSION ADJUSTING PLATE | 10 |
| | – | – | – | – | – | 9 |
| | – | – | – | – | – | 8 |
| | 1 | – | B | 471167 | RAM | 7 |
| | 1 | – | B | 314894–1 | TOOL HOLDER | 6 |
| | – | – | – | – | – | 5 |
| | 1 | – | B | 854652–9 | SPACER | 4 |
| △1 | 1 | – | B | 314895–1 | SHEAR DEPRESSOR | 3 |
| | 1 | – | B | 314896–1 | SPACER | 2 |
| △1 | 1 | – | C | 1803716–4 | WIRE CRIMPER .070 F | 1 |

REVISION OF EACH ASSY NO (WHEN BLANK, USE DWG REVISION)

PARTS LIST

THIS DRAWING IS A CONTROLLED DOCUMENT.

DIMENSIONS: INCHES

TOLERANCES UNLESS OTHERWISE SPECIFIED:
0 PLC ± –
1 PLC ± –
2 PLC ± –
3 PLC ± –
4 PLC ± –
ANGLES ± –

MATERIAL –

FINISH –

| | | |
|---|---|---|
| DWN | JC BAKER | 11/9/93 |
| CHK | C.ERISMAN | 11/15/93 |
| APVD | RA WOLFE | 11/9/93 |

PRODUCT SPEC –

APPLICATION SPEC –

WEIGHT –

TE Connectivity

NAME STD APPL. (45 DEG ROTATED SPLICE)

| SIZE | CAGE CODE | DRAWING NO | RESTRICTED TO |
|---|---|---|---|
| A1 | 00779 | C–566379 | – |

CUSTOMER DRAWING

SCALE 1:4 SHEET 1 OF 1 REV G

4805 (1/15)