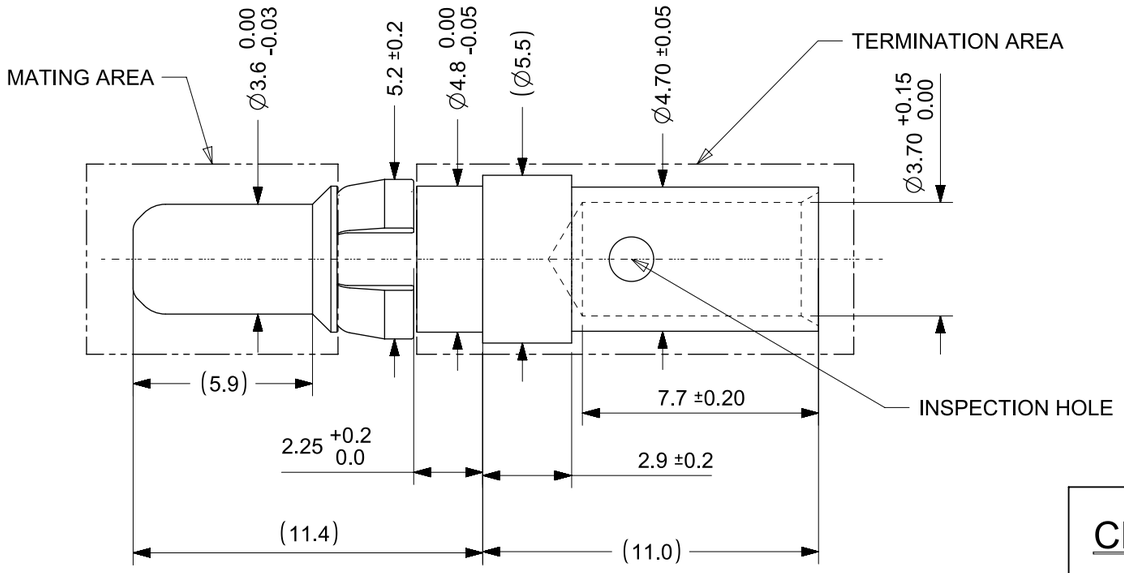

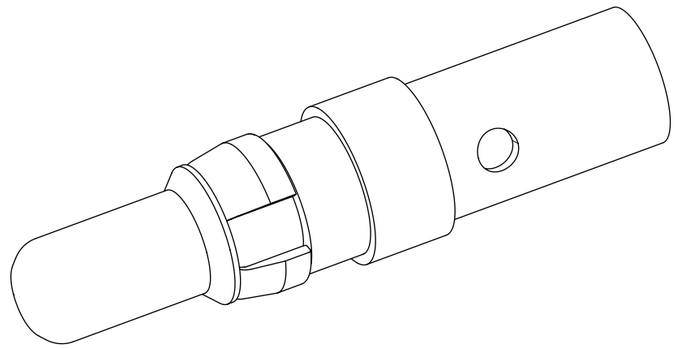

CRIMP DETAILS

-FOR STRIP LENGTH CONSIDER ESTABLISHED TECHNICAL CRIMP SPECIFICATION, FOR EXAMPLE IPC/WHMA-A-620.
-IN ADDITION KEEP CLEARANCE 'C' BETWEEN INSULATION AND CONTACT BARREL LESS THAN 50% OF OVERALL WIRE O.D.,WITH A RECOMMENDATION OF MAX. 1MM CLEARANCE C.
-PUSH STRIPPED WIRES INTO TERMINAL UP TO STOP.
-AFTER CRIMPING CHECK IF STRIPPED WIRES ARE VISIBLE IN INSPECTION HOLE.

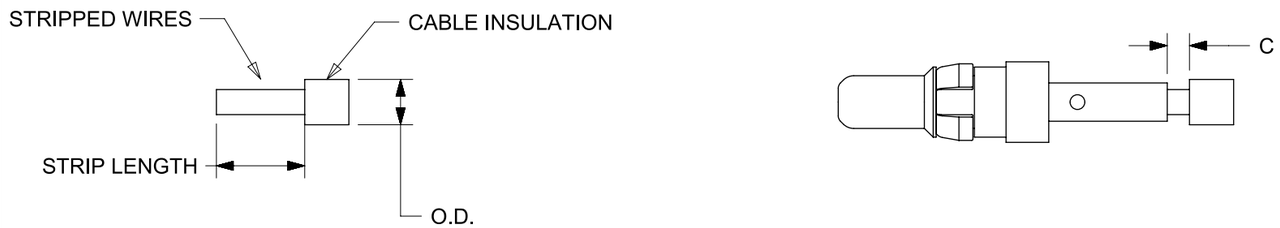

NOTES:
1.MATERIAL: COPPER ALLOY
2.PLATING-
MATING AREA: 0.1µm MIN. Au over 2µm MIN. NiP
TERMINATION AREA: 0.2µm MIN. Au over 2µm MIN. Ni
3.PRODUCT SPECIFICATION:
CIRCULAR CONNECTOR: 2009140003 PS
INLINE CONNECTOR: 2018400030 PS
4.APPLICATION SPECIFICATION: 200914003-AS (CIRCULAR CONNECTOR)
5.PACKAGING SPECIFICATION: 2018460001 PDD PK
6.MATES WITH THE TERMINAL SERIES 201846
7.USED WITH HOUSING SERIES 200914/201840
8.A)MAXIMUM ALLOWED OVERALL WIRE DIAMETER IS 6.50MM FOR SERIES 201840
B)MAXIMUM ALLOWED OVERALL WIRE DIAMETER IS 5.50MM FOR SERIES 200914
9.DIMENSIONS IN BRACKETS ARE REFERENCE ONLY.
10.APPLICATION TOOLING DETAILS
A)HAND CRIMP TOOL PART NUMBER : 2002182300
B)EXTRACTION TOOL PART NUMBER : 2002220200

RoHS compliant by exemption 6(c)

QUALITY SYMBOLS	
FA	= 0
FC	= 0
FP	= 0
▼	= 0
C	= 0
☒	= 0
■	= 0
C	= 0

THIS DRAWING CONTAINS INFORMATION THAT IS PROPRIETARY TO MOLEX ELECTRONIC TECHNOLOGIES, LLC AND SHOULD NOT BE USED WITHOUT WRITTEN PERMISSION

PRODUCTION RELEASE		2019/07/17
EC NO:	620825	2019/07/17
DRWN:	NMANE02	2019/07/17
CHK'D:	NMANE02	
APPR:	MRAMAKRISHNA	

A2 REV

GENERAL TOLERANCES (UNLESS SPECIFIED)

ANGULAR TOL ±		°
4 PLACES	±	
3 PLACES	±	
2 PLACES	±	0.13
1 PLACE	±	0.25
0 PLACES	±	

DRAFT WHERE APPLICABLE MUST REMAIN WITHIN DIMENSIONS

DIMENSION UNITS	mm
SCALE	5:1
DRWN BY	MRAMAKRISHNA
DATE	2016/04/04
CHK'D BY	MRAMAKRISHNA
DATE	2016/04/25
APPR BY	ISHWARG
DATE	2016/12/13
DRAWING SIZE	A3
THIRD ANGLE PROJECTION	

molex®

MULTICAT MALE CRP CONTACT 30A 10-12AWG

PRODUCT CUSTOMER DRAWING

SERIES	MATERIAL NUMBER	CUSTOMER
201845	2018450030	GENERAL MARKET

DOCUMENT NUMBER	DOC TYPE	DOC PART	SHEET NUMBER
2018450030	PSD	000	1 OF 1

RELEASE STATUS	P1	RELEASE DATE	2019/07/17 12:06:44

FORMAT: master-tb-prod-A3
REVISION: G
DATE: 2015/12/14