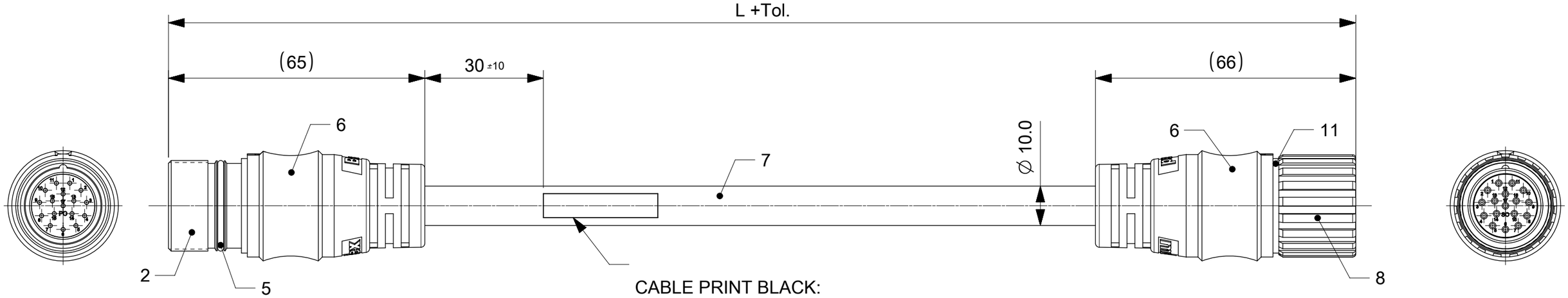

CABLE PRINT BLACK:
MOLEX (MOLEX PN) MXYYWW
(ACCORDING TO WN-00017)

Technical Data:

Contact ∅ [mm]	1
Nominal current [A]	4,5 (for 0.50mm² and for 0.25mm²) / 3 (for 0.14mm²)
Nominal voltage [V~]	160
Degree of pollution	3
Test voltage [V~]	1000
Max. contact resistance [mΩ]	3
Insulation resistance [MΩ]	> 100
Protection	IP67 (connected)
Temperature range (fixed)	-40°C to 90°C
Temperature range (flex)	-25°C to 80°C

Further technical data see
Product Specification 1204900050
Electrical Test according to 1204900051

Packaging:
The cordsets delivered packed into Carton.

Connector pin assignment
Plug M23 17P MA

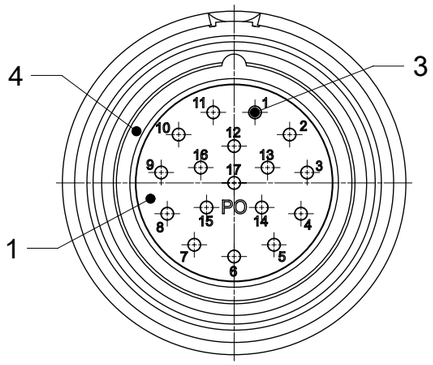

SCALE 2:1

Connector pin assignment
Plug M23 17P FE

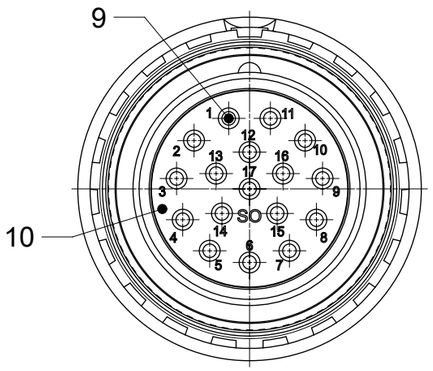

SCALE 2:1

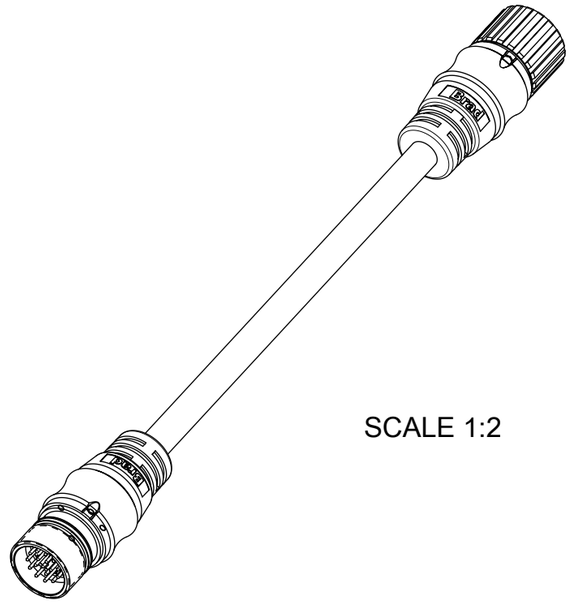

SCALE 1:2

TABLE 1

MOLEX PN	ENGINEERING No.	L [mm]	Tol. [mm]
1204900501	KKSJS30W10M010	1000	+40
1204900502	KKSJS30W10M020	2000	+60
1204900503	KKSJS30W10M030	3000	+60
1204900504	KKSJS30W10M040	4000	+60
1204900505	KKSJS30W10M050	5000	+60
1204900506	KKSJS30W10M100	10000	+80
1204900507	KKSJS30W10M150	15000	+140
1204900508	KKSJS30W10M200	20000	+140

DOCUMENT STATUS	P1	RELEASE DATE	2019/11/28 13:18:26

THIS DRAWING CONTAINS INFORMATION THAT IS PROPRIETARY TO MOLEX ELECTRONIC TECHNOLOGIES, LLC AND SHOULD NOT BE USED WITHOUT WRITTEN PERMISSION

SYMBOLS	DIMENSION UNITS	SCALE
	mm	1:1
GENERAL TOLERANCES (UNLESS SPECIFIED)		
ANGULAR TOL	±	1.0 °
4 PLACES	±	
3 PLACES	±	
2 PLACES	±	0.05
1 PLACE	±	0.3
0 PLACES	±	0.5

DRAFT WHERE APPLICABLE MUST REMAIN WITHIN DIMENSIONS

CURRENT REV DESC:

EC NO: 628246
DRWN: SSM 2019/11/27
CHK'D: RSILLER 2019/11/28
APPR: RSILLER 2019/11/28

INITIAL REVISION:
DRWN: FGAIK 2016/12/15
APPR: RSILLER 2017/02/02

THIRD ANGLE PROJECTION | DRAWING: A3-SIZE | SERIES: 120490

molex

CSE M23 17P SC MA STR WSOR FE XM SHLD

PRODUCT CUSTOMER DRAWING

DOCUMENT NUMBER	DOC TYPE	DOC PART	REVISION
1204900501	PSD	000	A3

MATERIAL NUMBER	CUSTOMER	SHEET NUMBER
SEE TABLE 1	GENERAL MARKET	1 OF 2

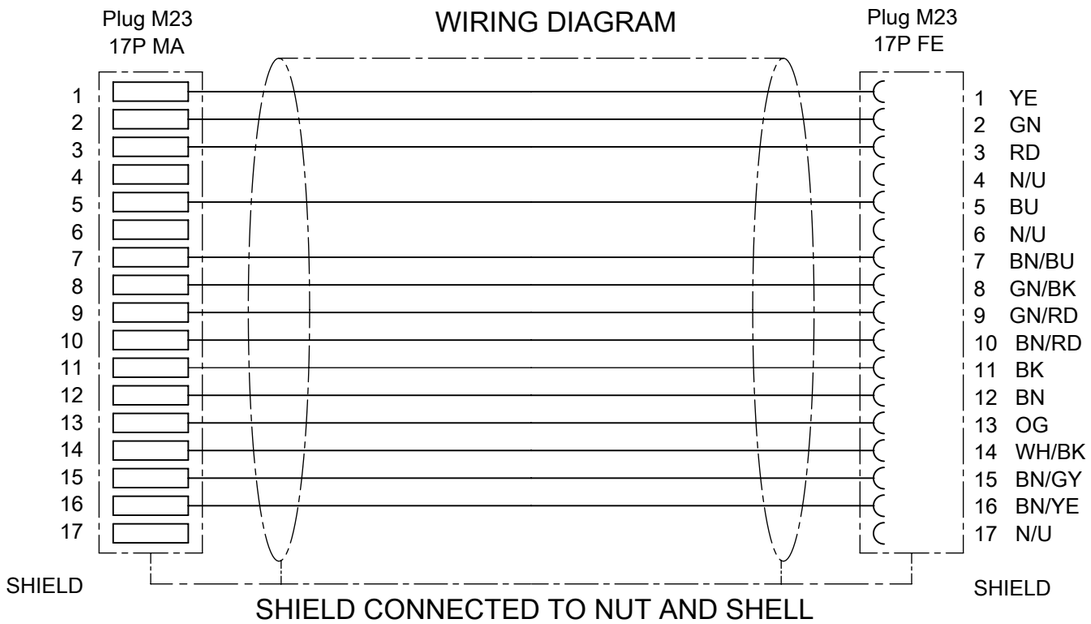

TABLE 2

ITEM	QTY	DESCRIPTION	MATERIAL	FINISH
1	1	INSERT M23 MALE 17P BLACK	PA66	-
2	1	SHELL M23 MALE	BRASS	NICKEL PLATED
3	17	CONTACT 10 MALE	BRASS	GOLD
4	1	GASKET OR 17X2 BLACK	NBR	-
5	1	GASKET OR 20X1.5 BLACK	NBR	-
6	-	OVERMOLD BLACK	TPU	-
7	-	CABLE (3x(2x0.14)+2x0.5+4x0.14+4x0.22)WSORL	WSOR	-
8	1	NUT M23 FEMALE	BRASS	NICKEL PLATED
9	17	CONTACT 10 FEMALE	BRASS	GOLD
10	1	INSERT M23 FEMALE 17P BLACK	PA66	-
11	1	SHELL M23 FEMALE	BRASS	NICKEL PLATED

THIS DRAWING CONTAINS INFORMATION THAT IS PROPRIETARY TO MOLEX ELECTRONIC TECHNOLOGIES, LLC AND SHOULD NOT BE USED WITHOUT WRITTEN PERMISSION

SYMBOLS: = 0

DIMENSION UNITS: mm
SCALE: 1:1

GENERAL TOLERANCES (UNLESS SPECIFIED)
ANGULAR TOL ± 1.0 °
4 PLACES ±
3 PLACES ±
2 PLACES ± 0.05
1 PLACE ± 0.3
0 PLACES ± 0.5

DRAFT WHERE APPLICABLE MUST REMAIN WITHIN DIMENSIONS

CURRENT REV DESC:

EC NO: 628246
DRWN: SSM 2019/11/27
CHK'D: RSILLER 2019/11/28
APPR: RSILLER 2019/11/28

INITIAL REVISION:
DRWN: FGAIK 2016/12/15
APPR: RSILLER 2017/02/02

THIRD ANGLE PROJECTION
DRAWING: A3-SIZE
SERIES: 120490

molex

CSE M23 17P SC MA STR WSOR FE XM SHLD

PRODUCT CUSTOMER DRAWING

DOCUMENT NUMBER	DOC TYPE	DOC PART	REVISION
1204900501	PSD	000	A3

MATERIAL NUMBER	CUSTOMER	SHEET NUMBER
SEE SHEET 1	GENERAL MARKET	2 OF 2

DOCUMENT STATUS	P1	RELEASE DATE	2019/11/28 13:18:26

FORMAT: master_tb_iso-A3
REVISION: H
DATE: 2018/01/16

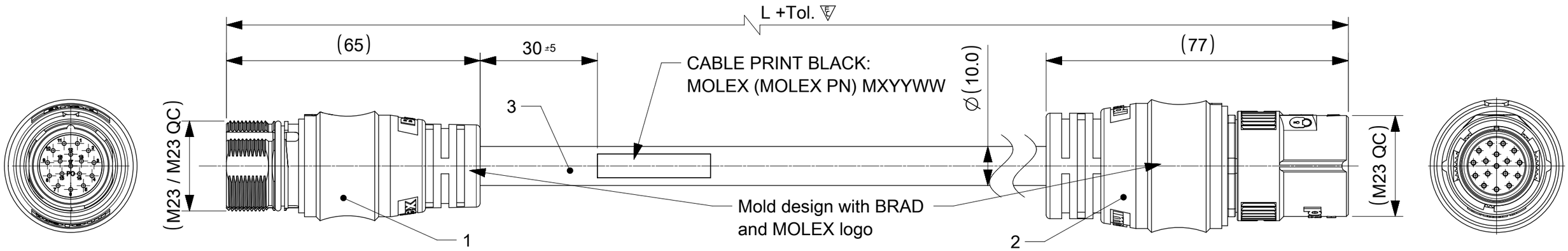

Connector pin assignment
Plug M23 17P MA

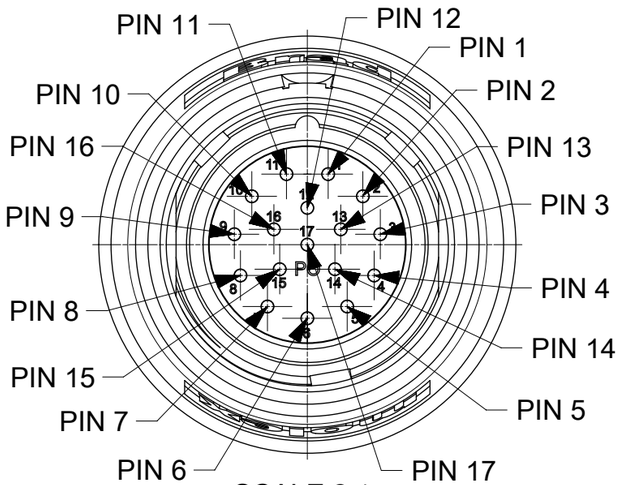

SCALE 2:1

WIRING DIAGRAM

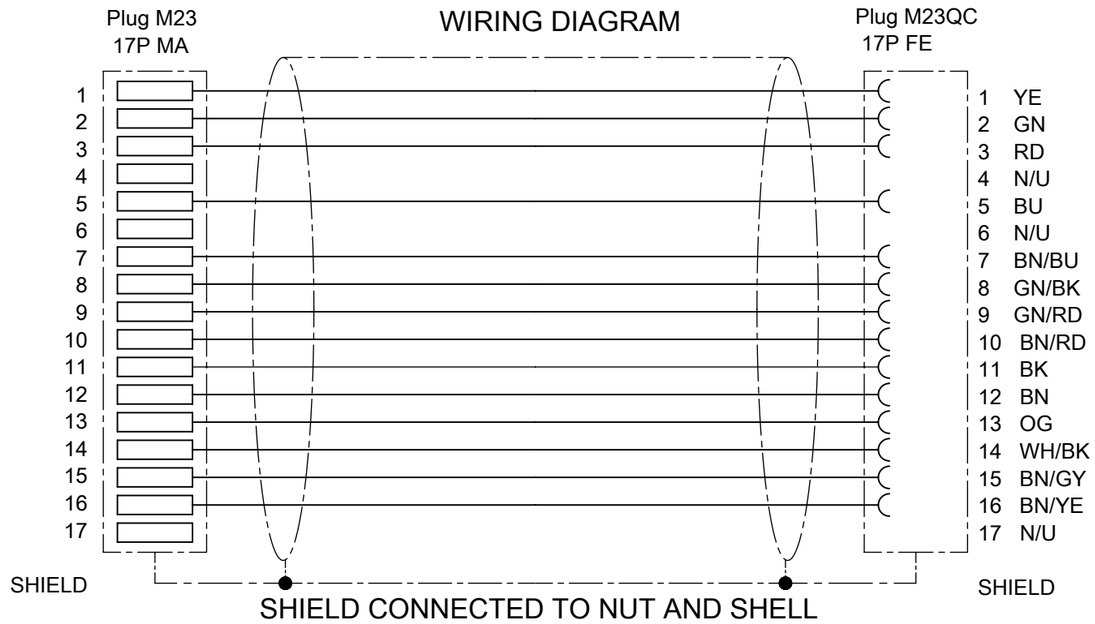

Connector pin assignment
Plug M23 17P FE

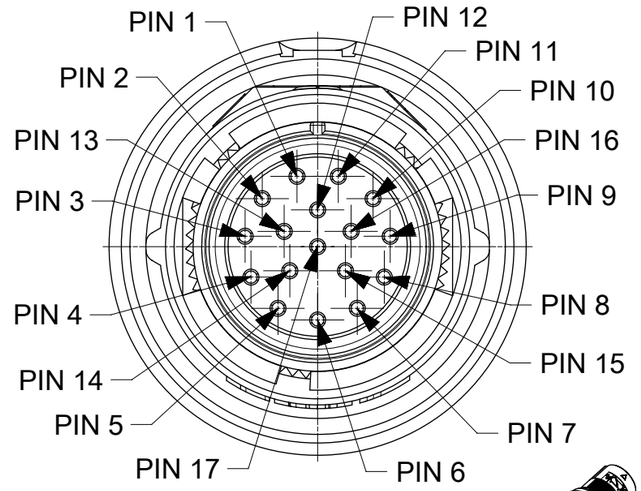

SCALE 2:1

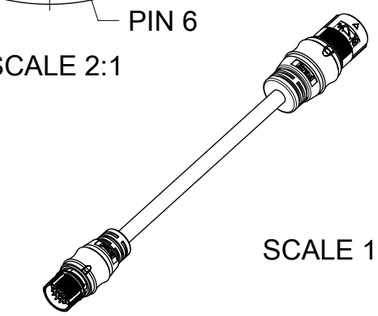

SCALE 1:4

Technical Data:

Number of positions	17
Number of contcts	17
Contact Ø [mm]	1
Nominal current [A]	9 (for 0.50 mm²) 4.5 (for 0.25 mm²) 3 (for 0.14 mm²)
Nominal voltage [V~] Degree of polution 3	160
Test voltage [V~]	1500
Max. contact resistance [mΩ]	3
Insulation resistance [MΩ]	$>10^{10}$
Protection	IP67 (connected)
Temperatur range (fixed)	-40°C to 90°C
Temperature range (flex)	-25°C to 80°C

Further details see Product Specification 1204900050

The cordsets delivered packed into carton without PE-bag

TABLE1

MOLEX PN	L [mm]	Tol. [mm]
1204900501	1000	+40
1204900502	2000	+60
1204900503	3000	+60
1204900504	4000	+60
1204900505	5000	+60
1204900506	10000	+80
1204900507	15000	+140
1204900508	20000	+140

TABLE 2

ITEM	QTY	DESCRIPTION
1	1	PLG M23 17P SC MA STR SHLD
2	1	PLG M23QC 17P FE STR SHLD
3	-	CABLE 3X(2X0.14)+2X0.50+4X0.14+4X0.25 WS

THIS DRAWING CONTAINS INFORMATION THAT IS PROPRIETARY TO MOLEX ELECTRONIC TECHNOLOGIES, LLC AND SHOULD NOT BE USED WITHOUT WRITTEN PERMISSION

SYMBOLS: E = 0; E = 1; E = 0; S = 0; ▼ = 0; C = 0; ☒ = 0; ■ = 0; V = 0

DIMENSION UNITS: mm
SCALE: 1:1
GENERAL TOLERANCES (UNLESS SPECIFIED)
ANGULAR TOL ± 1.0 °
4 PLACES ±
3 PLACES ±
2 PLACES ± 0.05
1 PLACE ± 0.3
0 PLACES ± 0.5
DRAFT WHERE APPLICABLE MUST REMAIN WITHIN DIMENSIONS

CURRENT REV DESC:
EC NO: 625960
DRWN: THAERDT 2019/10/21
CHK'D: RSILLER 2019/11/21
APPR: RSILLER 2019/11/21
INITIAL REVISION:
DRWN: MSCHERER 2018/06/29
APPR: RSILLER 2019/11/21

THIRD ANGLE PROJECTION
DRAWING: A3-SIZE
SERIES: 120490

molex

CSE M23QC 17P SC MA STR WSOR FE 1XM SHLD

PRODUCT CUSTOMER DRAWING

DOCUMENT NUMBER	DOC TYPE	DOC PART	REVISION
1204901575	PSD	000	A

MATERIAL NUMBER	CUSTOMER	SHEET NUMBER
SEE TABLE 1	GENERAL MARKET	1 OF 1

DOCUMENT STATUS	P1	RELEASE DATE	2019/11/21 07:37:48

FORMAT: master_tmpl_v5-A3
REVISION: H
DATE: 2018/01/16