THIS DRAWING IS UNPUBLISHED. RELEASED FOR PUBLICATION -.- .
© COPYRIGHT - By - ALL RIGHTS RESERVED.

REVISIONS

P	LTR	DESCRIPTION	DATE	DWN	APVD
	N	REVISED PER ECO-15-015252	13NOV15	BJ	FY

1. HOUSING MATERIAL: POLYPHENYLENE SULFIDE, COLOR-NATURAL.
2. POST MATERIAL: PHOSPHOR BRONZE.
3. FINISH:
   MATING AREA: MEETS THE PERFORMANCE REQUIREMENTS OF PRODUCT SPECIFICATION 108-9063; BASED ON TELCORDIA DR-1217-CORE APPLICATIONS IN UNCONTROLLED ENVIRONMENTS.
   SOLDER TAILS AREA: TIN-LEAD PLATED.
4. MARKED 'AMP', PART NO. & DATE CODE THIS APPROXIMATE AREA.
5. ACTION PIN POSTS REQUIRE .093 MIN THK PC BOARD. RECOMMENDED PC BOARD HOLES ARE .0453 DIA DRILL PLATED THROUGH WITH .001-.003 COPPER, WITH .0003 MIN TIN-LEAD PLATING. FINISHED HOLE AFTER PLATING, .037-.043 DIA.

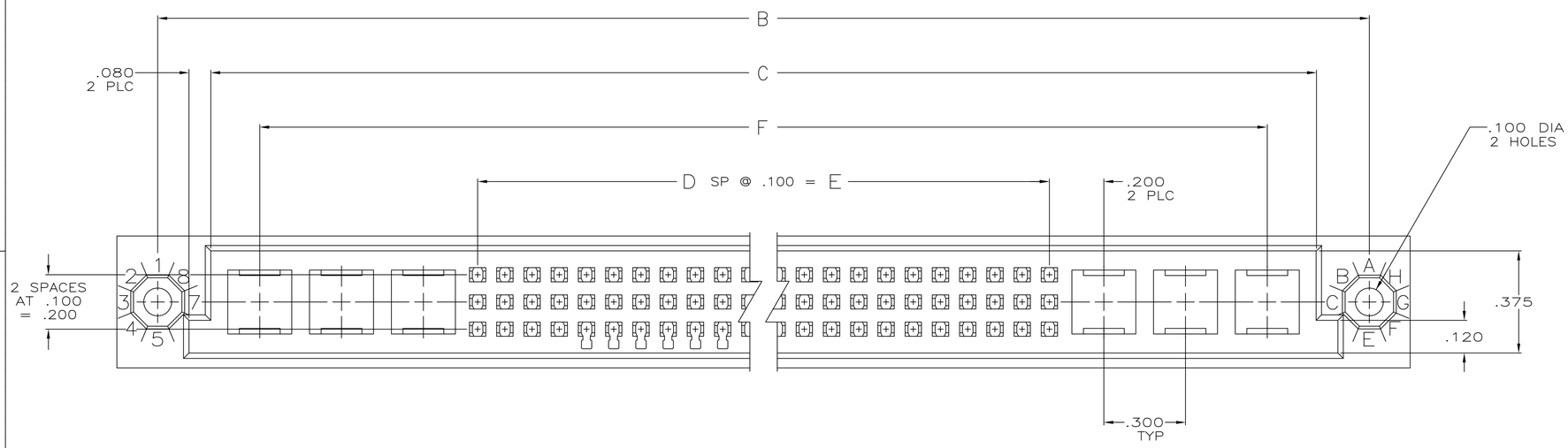

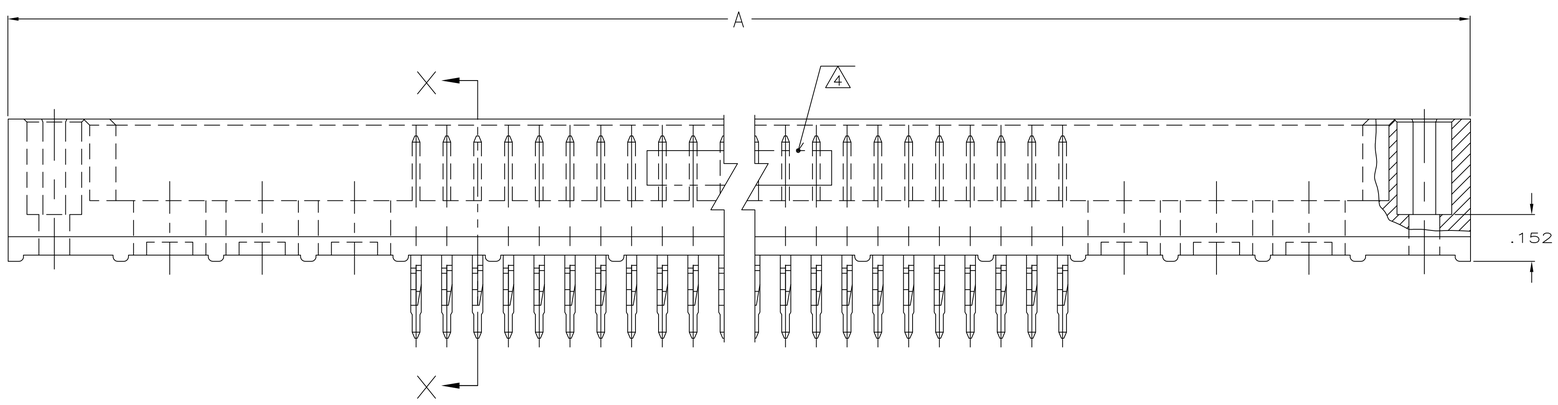

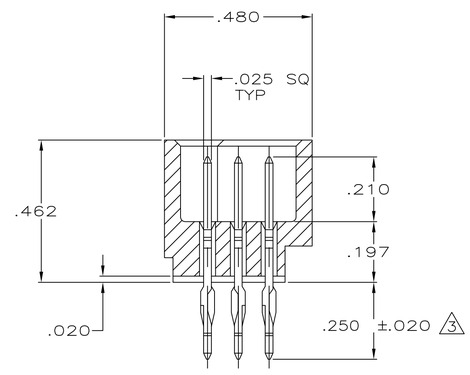

SECTION X-X

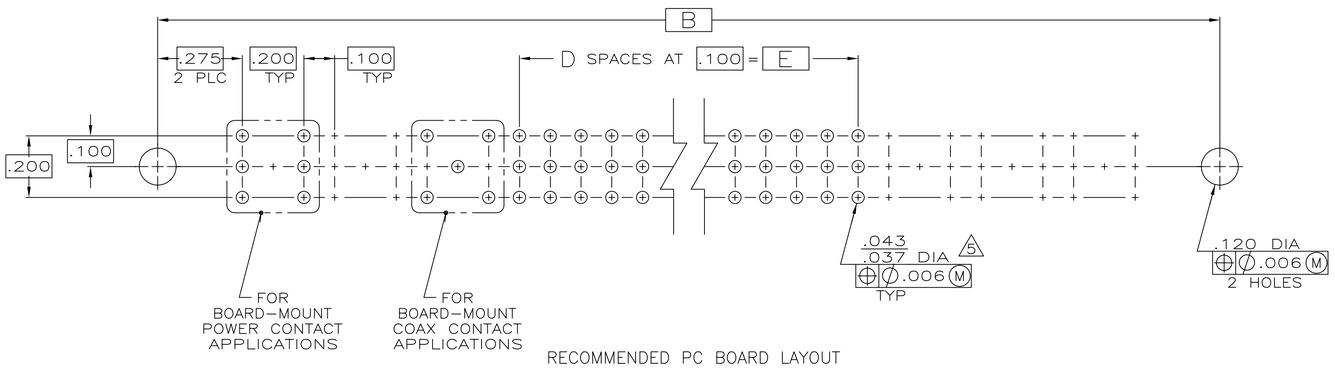

RECOMMENDED PC BOARD LAYOUT

	POWER PORTS NUMBER END	POWER PORTS LETTER END	F	E	D	C	B	A	POSN	PART NUMBER
	3	3	2.900	1.300	13	3.250	3.650	3.950	42	1-533429-2
OBSOLETE	2	2	2.200	1.200	12	2.550	2.950	3.250	39	1-533429-1
OBSOLETE	2	2	2.900	1.900	19	3.250	3.650	3.950	60	1-533429-0
OBSOLETE	4	4	2.900	.700	7	3.250	3.650	3.950	24	533429-9
OBSOLETE	2	2	4.100	3.100	31	4.450	4.850	5.150	96	533429-8
	-	-	-	-	-	-	-	-	-	-
	-	-	-	-	-	-	-	-	-	-
	-	-	-	-	-	-	-	-	-	-
	-	-	-	-	-	-	-	-	-	-
	-	-	-	-	-	-	-	-	-	-
OBSOLETE	1	1	7.200	6.800	68	7.550	7.950	8.250	207	533429-2
	-	-	-	-	-	-	-	-	-	-

THIS DRAWING IS A CONTROLLED DOCUMENT.

DIMENSIONS: INCHES

TOLERANCES UNLESS OTHERWISE SPECIFIED:
0 PLC ± -
1 PLC ± -
2 PLC ± -
3 PLC ± .005
4 PLC ± -
ANGLES ± -

MATERIAL 1 2
FINISH 3

DWN R K SEIFRIED 1/10/86
CHK G STEINHAUER 1/11/86
APVD G STEINHAUER 1/11/86
PRODUCT SPEC —
APPLICATION SPEC —
WEIGHT 0

TE Connectivity

NAME: PIN HEADER ASSEMBLY, HDI SERIES-100 HYBRID, 3-ROW, SQUARE PORTS

SIZE	CAGE CODE	DRAWING NO	RESTRICTED TO
A1	00779	C-533429	—

CUSTOMER DRAWING | SCALE 4:1 | SHEET 1 OF 1 | REV N

4805 (1/15)