ALC80F182EH250

Aliases (A547HK182M250F)

ALC80, Aluminum Electrolytic, 1,800 uF, 20%, 250 VDC, -40/+105°C

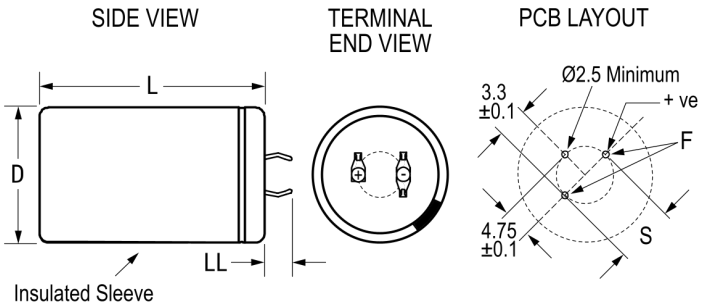

Click here for the 3D model.

Dimensions	
D	40mm +1mm
L	60mm +/-2mm
S	10mm +/-0.1mm
LL	4mm +/-1mm
F	2mm +/-0.1mm

Packaging Specifications	
Sleeving	Yes
Packaging	Bulk, Bag

General Information	
Series	ALC80
Dielectric	Aluminum Electrolytic
Description	Snap-In, Aluminum Electrolytic
RoHS	Yes
Lead	3 Pin Short
AEC-Q200	No
Halogen Free	Yes
Component Weight	125 g
Notes	Dimensions D And L Include Sleeving.
Shelf Life	156 Weeks

Specifications	
Capacitance	1,800 uF
Capacitance Tolerance	20%
Voltage DC	250 VDC, 288 VDC (Surge)
Temperature Range	-40/+105°C
Rated Temperature	105°C
Life	9000 Hrs (Rated Voltage and Ripple Current at 105C), 14000 Hrs (Rated Voltage at 105C)
Resistance	105 mOhms (100Hz 20C), 64.23 mOhms (10kHz 20C)
Ripple Current	5.024 Amps (100Hz 105C), 9.573 Amps (10kHz 105C)
Leakage Current	1350 uA (5min 20°C)

Statements of suitability for certain applications are based on our knowledge of typical operating conditions for such applications, but are not intended to constitute - and we specifically disclaim - any warranty concerning suitability for a specific customer application or use. This Information is intended for use only by customers who have the requisite experience and capability to determine the correct products for their application. Any technical advice inferred from this Information or otherwise provided by us with reference to the use of our products is given gratis, and we assume no obligation or liability for the advice given or results obtained.

© 2006 - 2023 KEMET