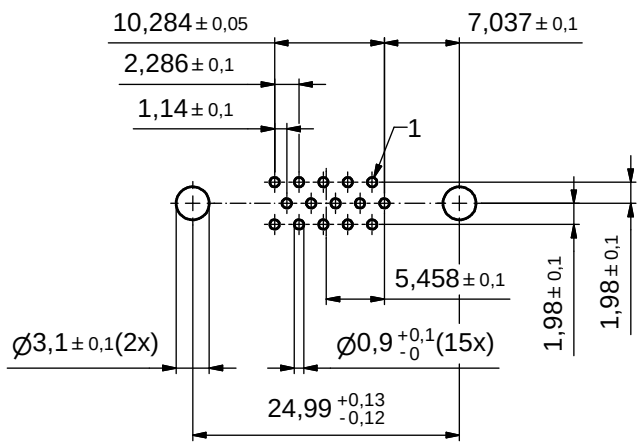

P.C.B. HOLE DRILLINGS

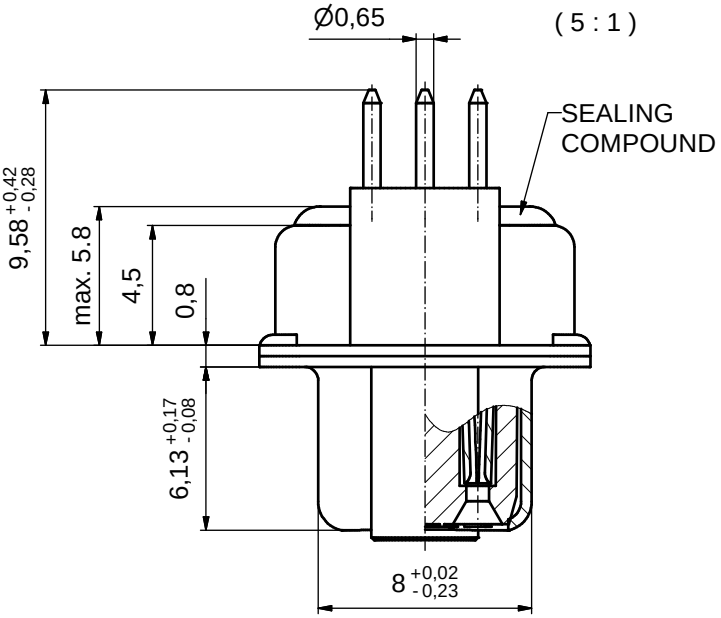

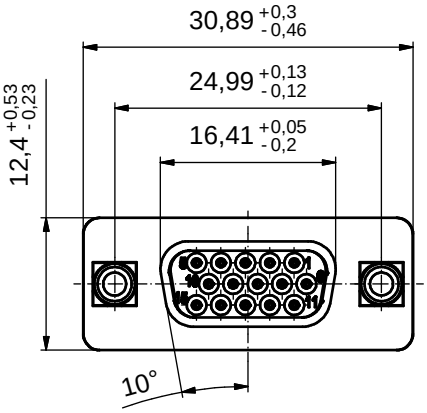

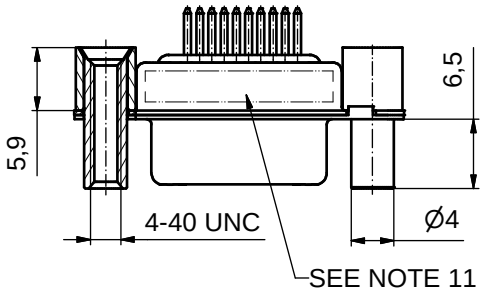

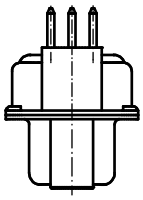

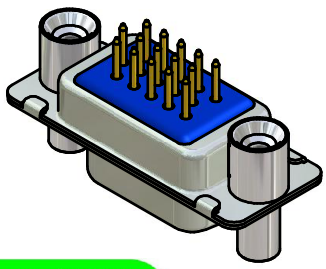

Directive 2002/95/EC „RoHS" Compliant

NOTES:

1. RoHS COMPLIANT
2. SUITABLE FOR WAVESOLDERING
3. METALSHELLS: STEEL; min. 315µin TIN over 40-80µin NICKEL
4. INSULATORS: HIGH TEMPERATURE PLASTIC UL 94 V-0, BLACK
5. CONTACTS: COPPER ALLOY
   PLATING: 8µin HARD GOLD over min. 50µin NICKEL
6. THREADED REAR SPACER / FRONT THREADED LOCK:
   COPPER ALLOY; min. 200µin TIN over 80µin NICKEL
7. SLEEVE: COPPER ALLOY; min. 200µin TIN over 80µin NICKEL
8. CAPACITANCE: 830pF±20%
9. DIELECTRIC WITHSTANDING VOLTAGE: 300 VDC
10. MAXIMUM TORQUE VALUE FOR THREAD: 6 in.LB
11. CONNECTOR IS PART MARKED: 242A18420X CONEC ABC

APPROVAL # FREIGABE # DEBLOCAGE # AUTORIZACION # APPROVAL

CUSTOMER APPROVAL DATE:

NAME: TITLE:

COMPANY NAME:

APPROVAL # FREIGABE # DEBLOCAGE # AUTORIZACION # APPROVAL

THIS DRAWING MAY NOT BE COPIED OR REPRODUCED IN ANY WAY, AND MAY NOT BE PASSED ON TO A THIRD PARTY WITHOUT WRITTEN PERMISSION. OWNERSHIP AND COPYRIGHT OF CONEC GmbH

DO NOT ALTER CAD DRAWING BY HAND

rev.	description	date	name
a	Origin		

tolerance — dim. in mm

	date	name
drawn	09.01.2008	Sonnenberg
appd.	09.01.2008	Mickenbecker
norm		
d-old		

CONEC

scale: 2:1 (5:1)
material: SEE NOTES

title:
D-SUB HD FILTER FEMALE
15pos. SOLDER PIN STRAIGHT
threaded rear spacer and front threaded lock

dwg no: 24K1A1061 — Inventor 10 — DIN-A3 — sh: 1

part no: 242A18420X