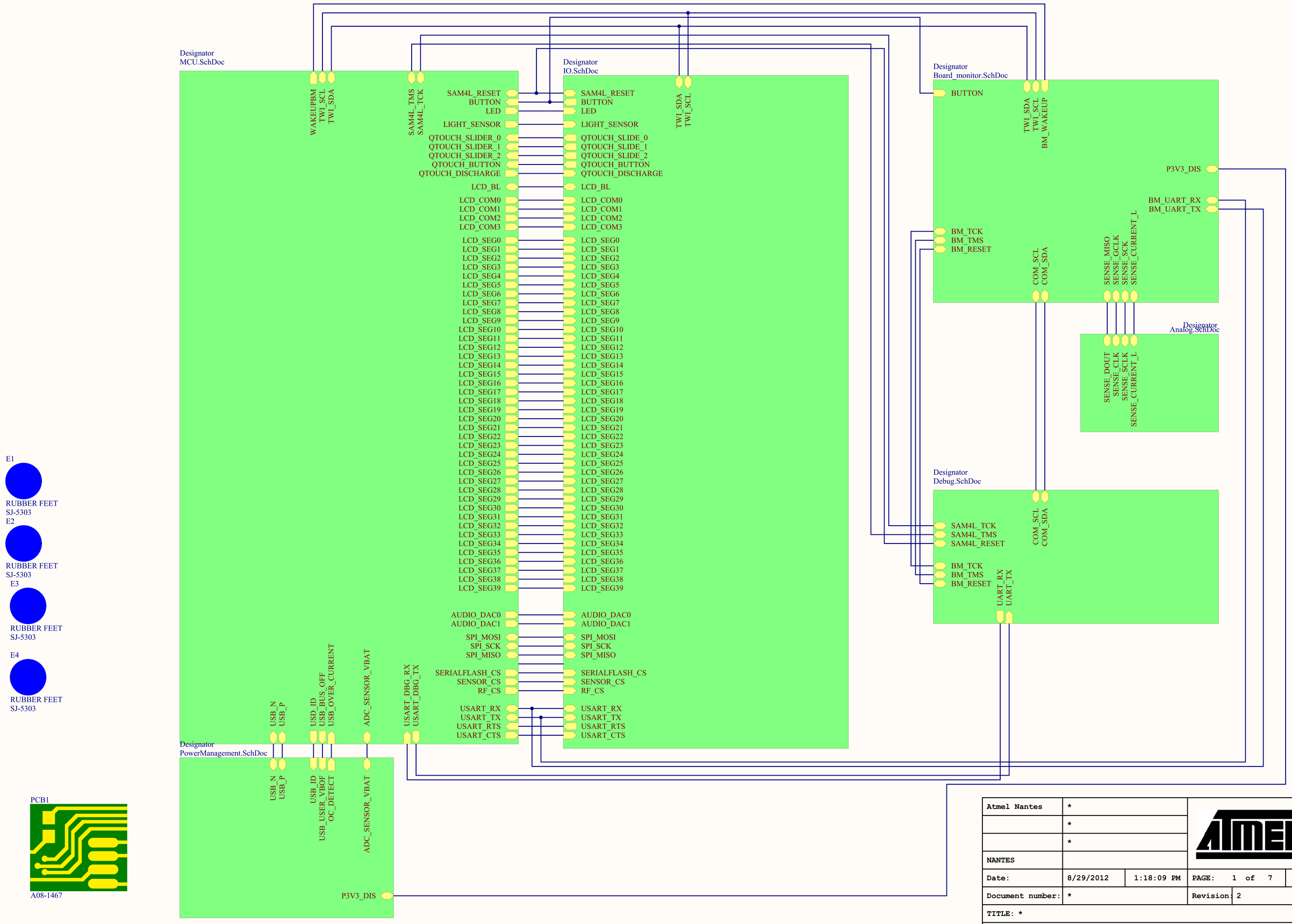

Atmel Nantes	*		
	*		
	*		
NANTES			
Date:	8/29/2012	1:18:09 PM	PAGE: 1 of 7
Document number:	*		Revision: 2
TITLE: *			
TopLevel.SchDoc			

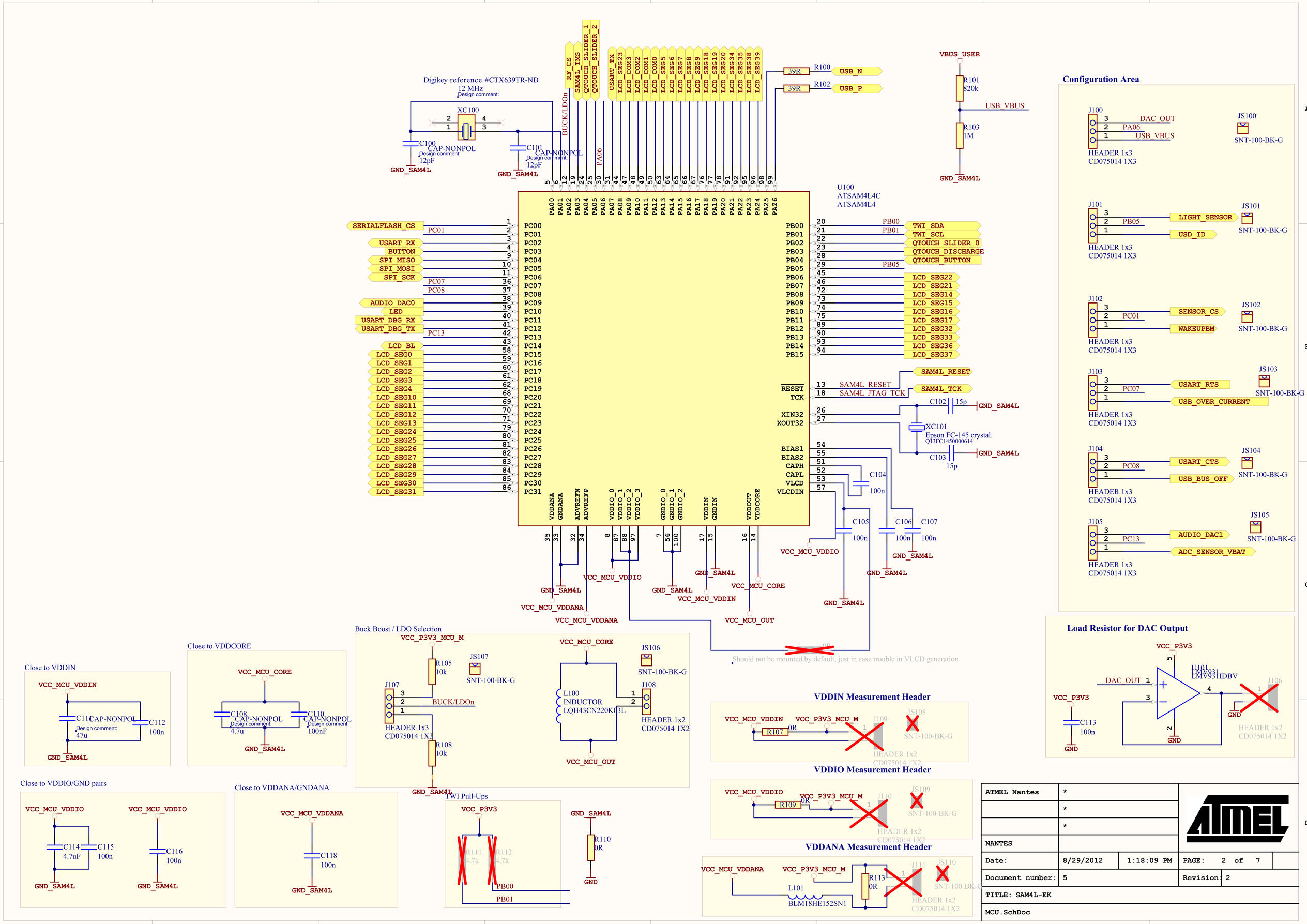

ATMEL Nantes	*		
	*		
	*		
NANTES			
Date:	8/29/2012	1:18:09 PM	PAGE: 2 of 7
Document number:	5		Revision: 2
TITLE: SAM4L-EK			
MCU.SchDoc			

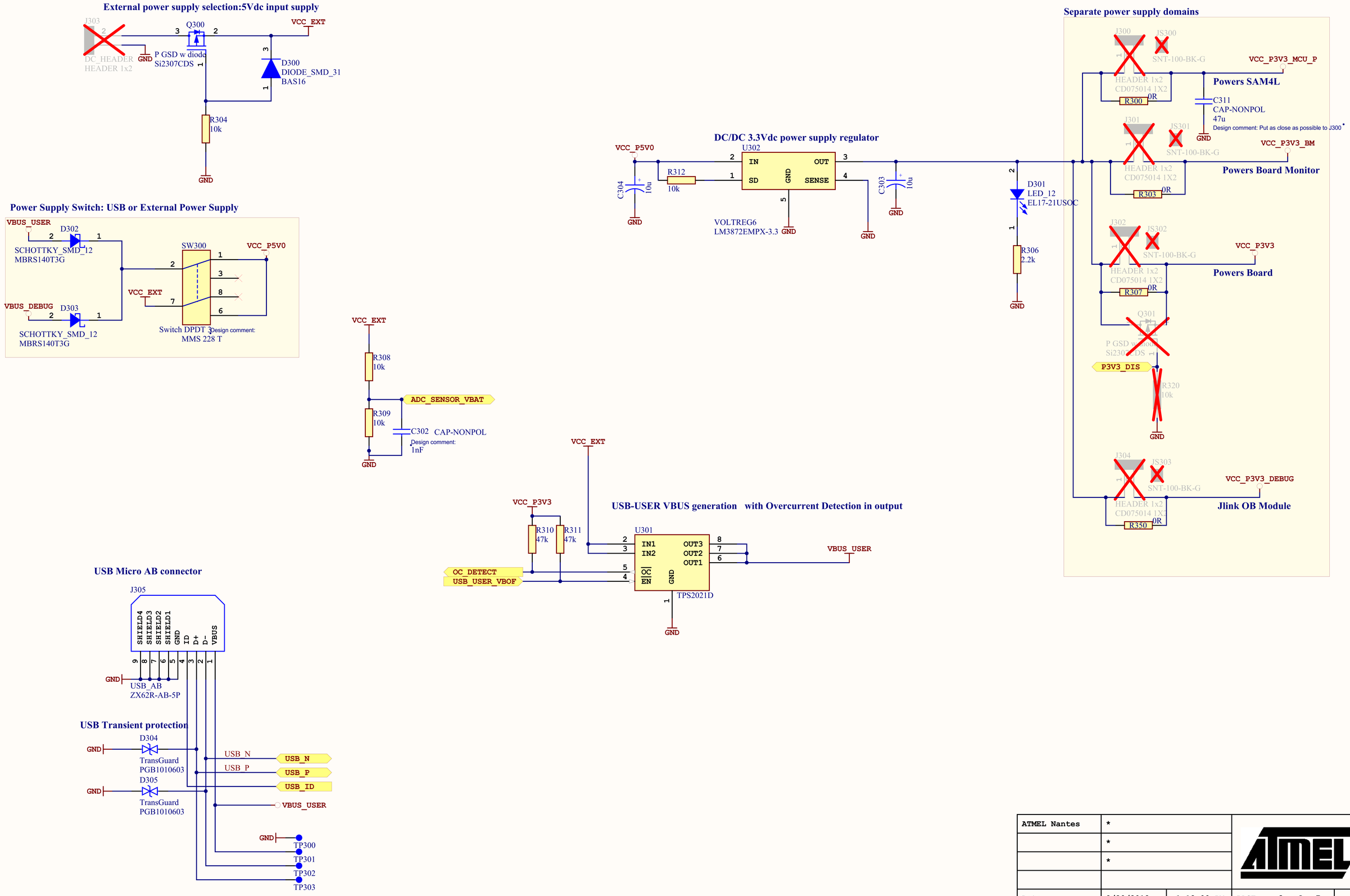

ATMEL Nantes	*		
	*		
	*		
Date:	8/29/2012	1:18:09 PM	PAGE: 3 of 7
Document number:	4		Revision: 2
TITLE: SAM4L-EK			
PowerManagement.SchDoc			

RS485 Interface

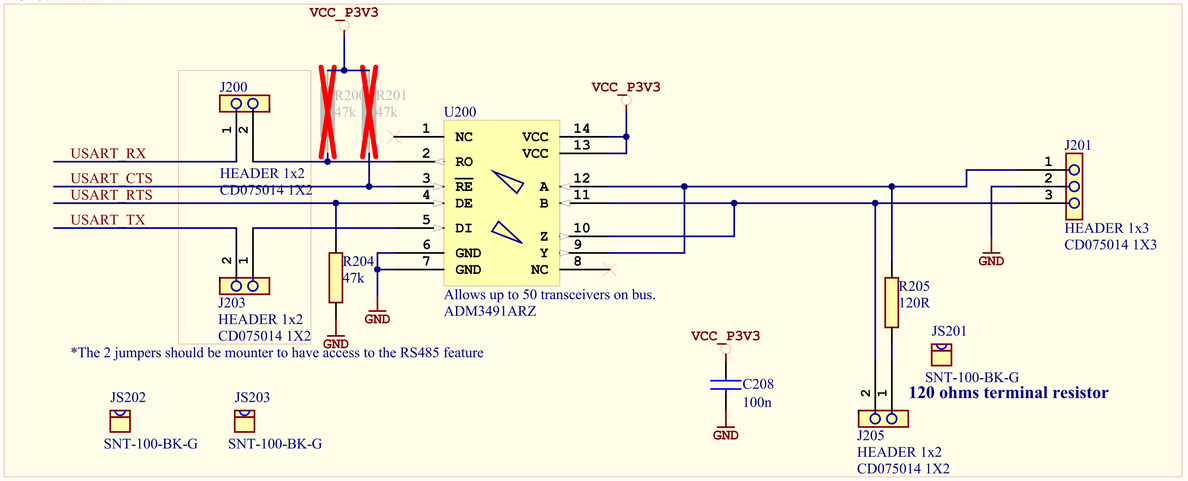

Audio Interface

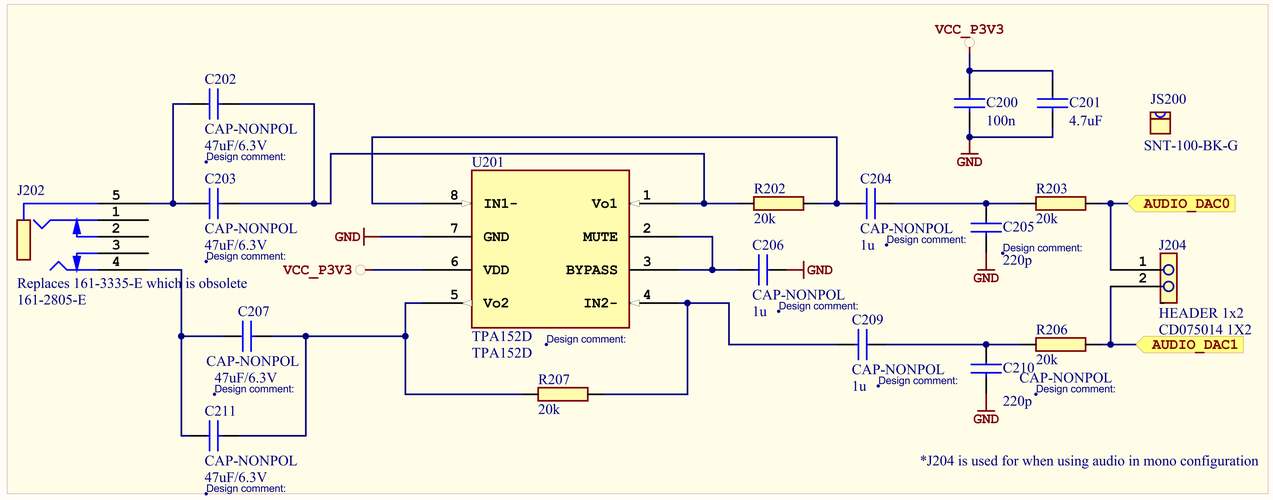

1 Push-Button, 1x Reset Button and 1x LED

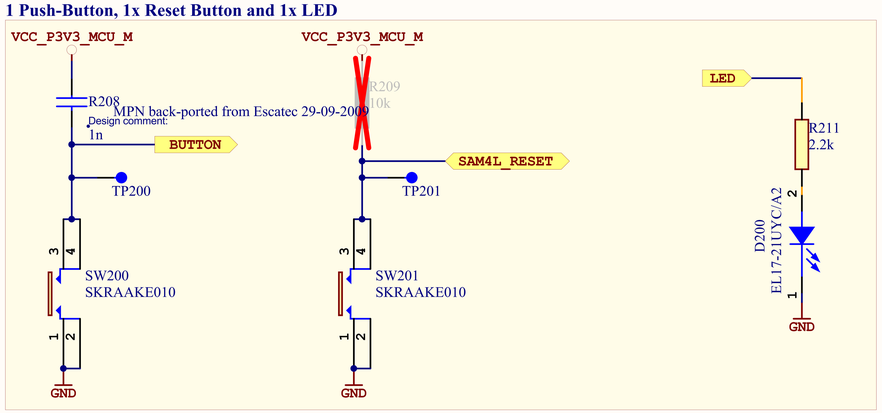

Touch Interface

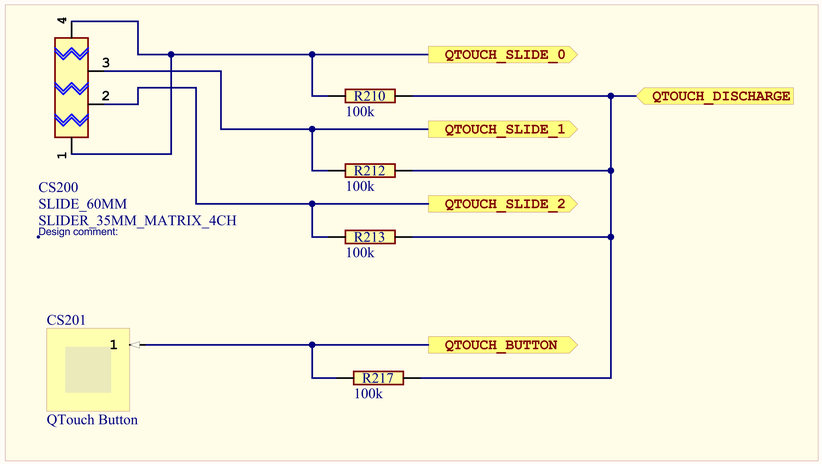

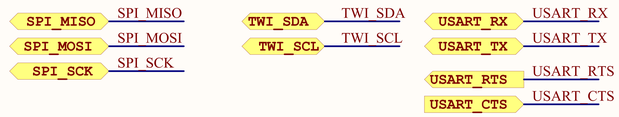

Dataflash

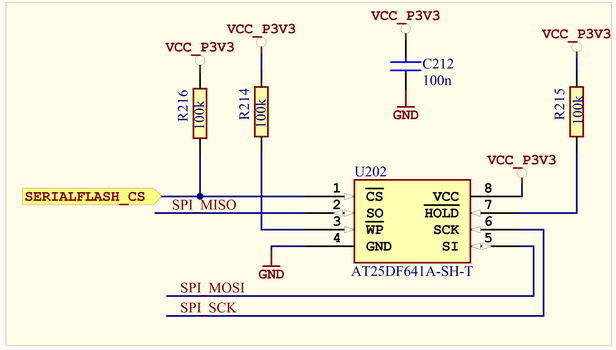

Expansion header for Wireless interface

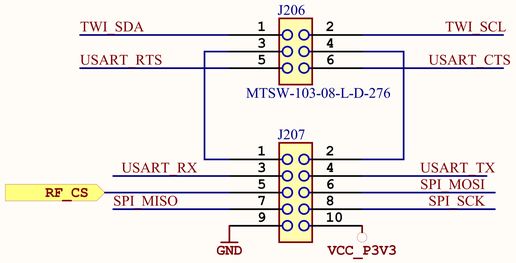

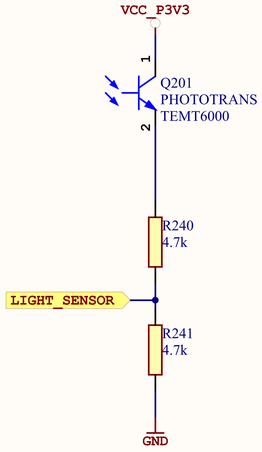

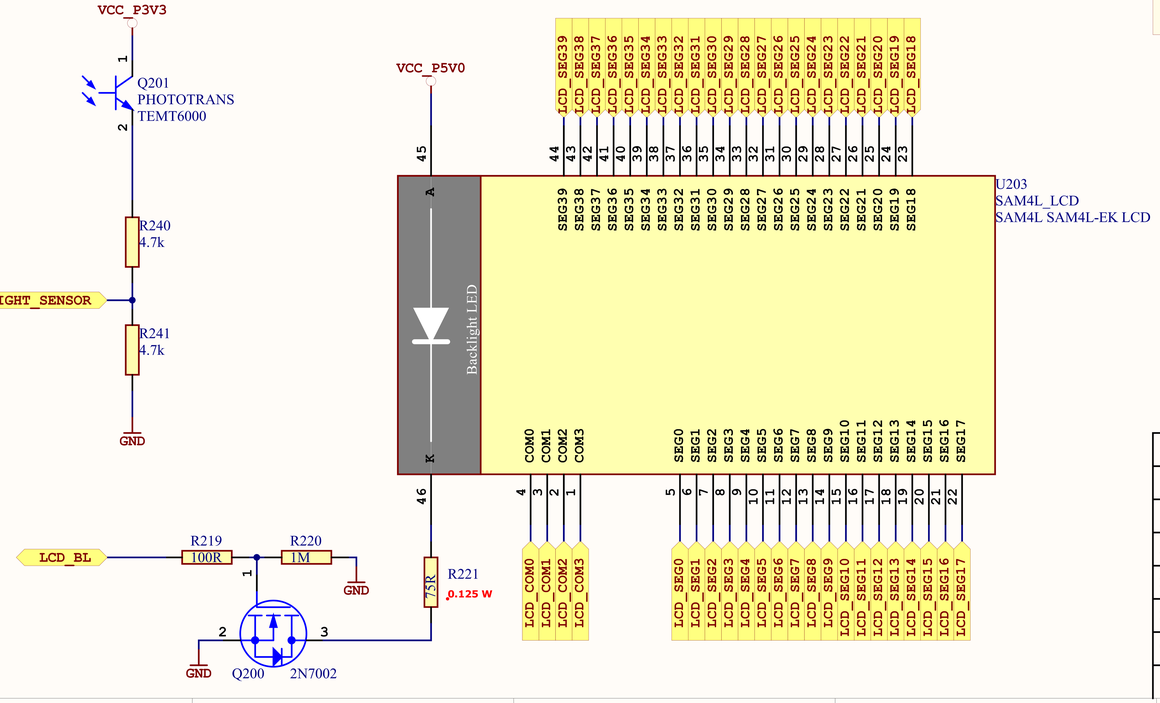

Sensor Xplained Connector

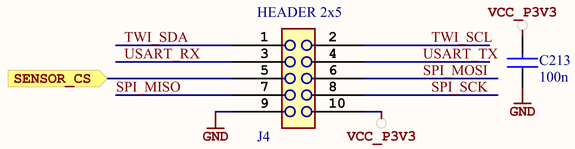

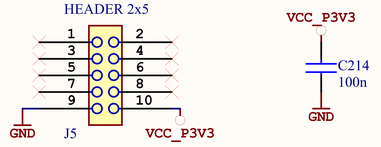

ATMEL Nantes	*		
	*		
	*		
NANTES			
Date:	8/29/2012	1:18:09 PM	PAGE: 4 of 7
Document number:	3		Revision: 2
TITLE: SAM4L-EK			
IO.SchDoc			

Current Measurement Stage

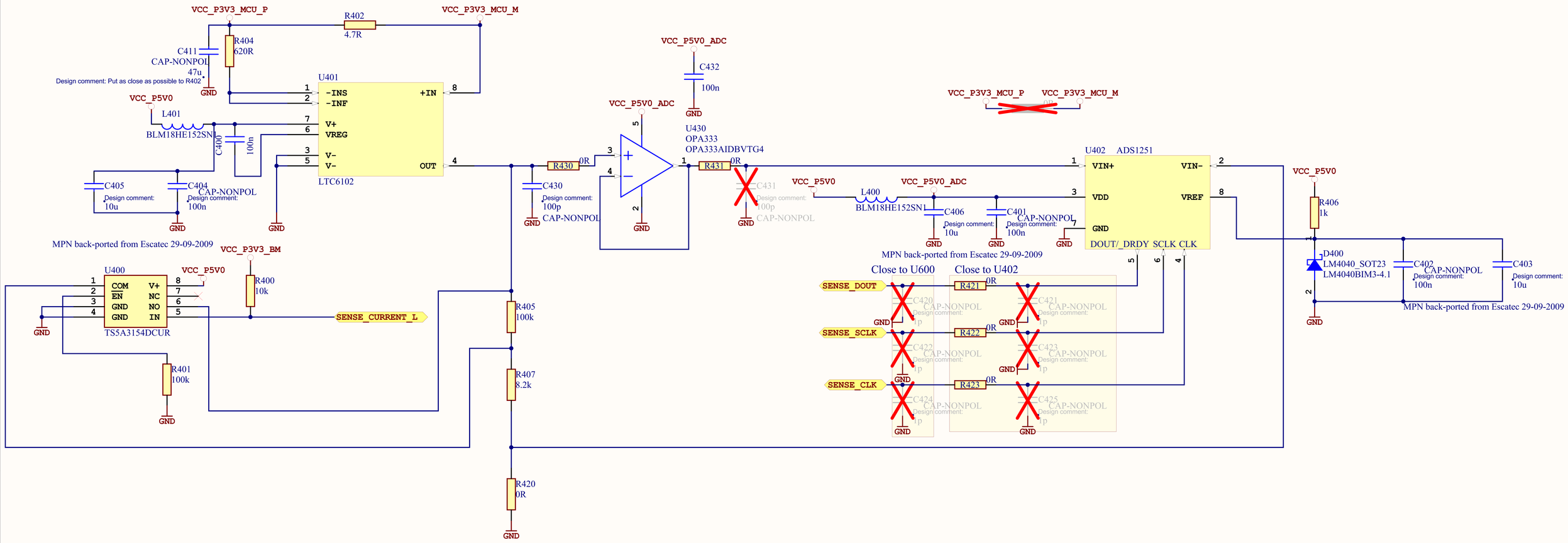

ATMEL Nantes	*		
	*		
	*		
NANTES			
Date:	8/29/2012	1:18:28 PM	PAGE: 5 of 7
Document number:	6		Revision: 2
TITLE: SAM4L-EK			
Analog.SchDoc			

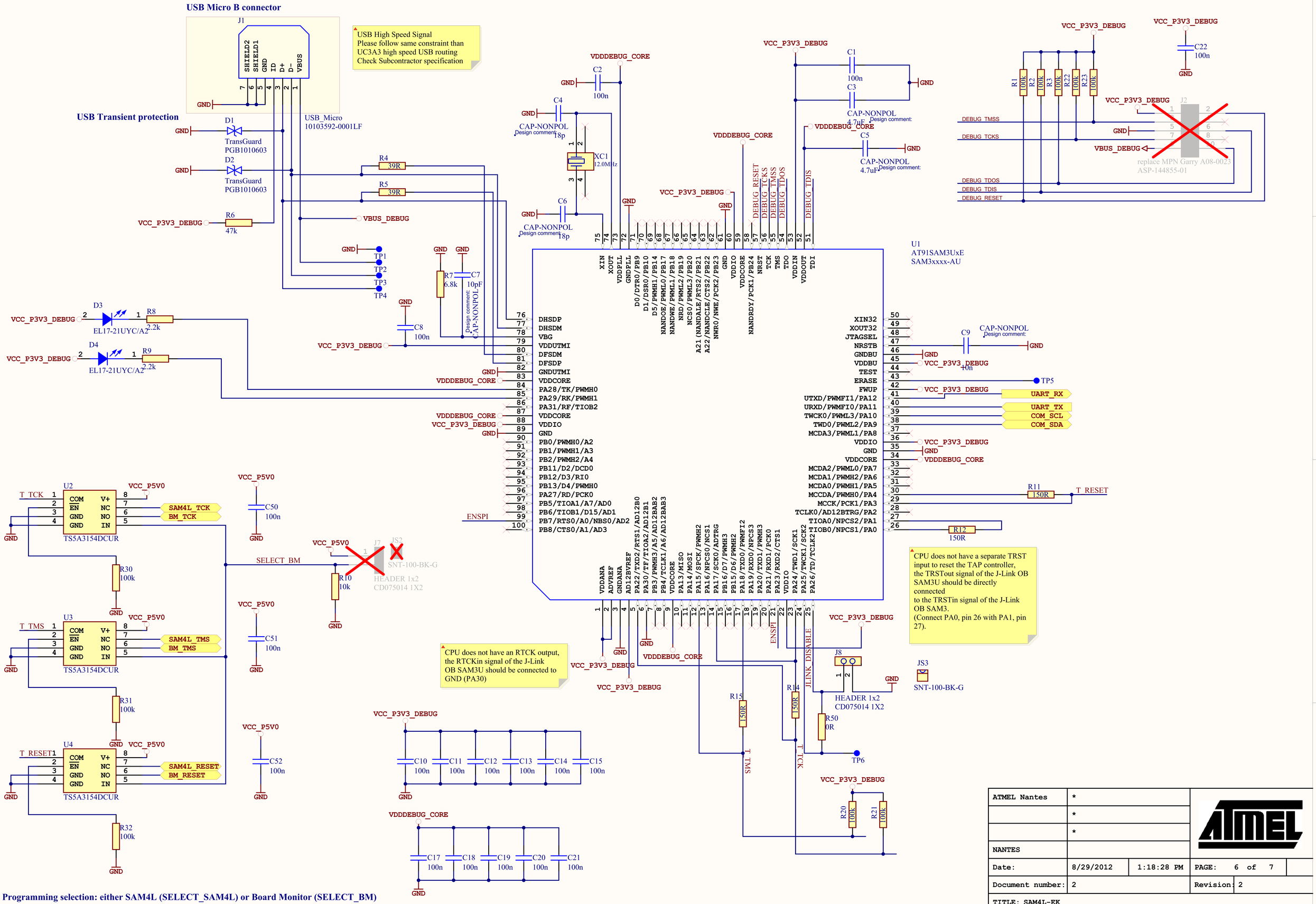

ATMEL Nantes	*		
	*		
	*		
NANTES			
Date:	8/29/2012	1:18:28 PM	PAGE: 6 of 7
Document number:	2		Revision: 2
TITLE: SAM4L-EK			
Debug.SchDoc			

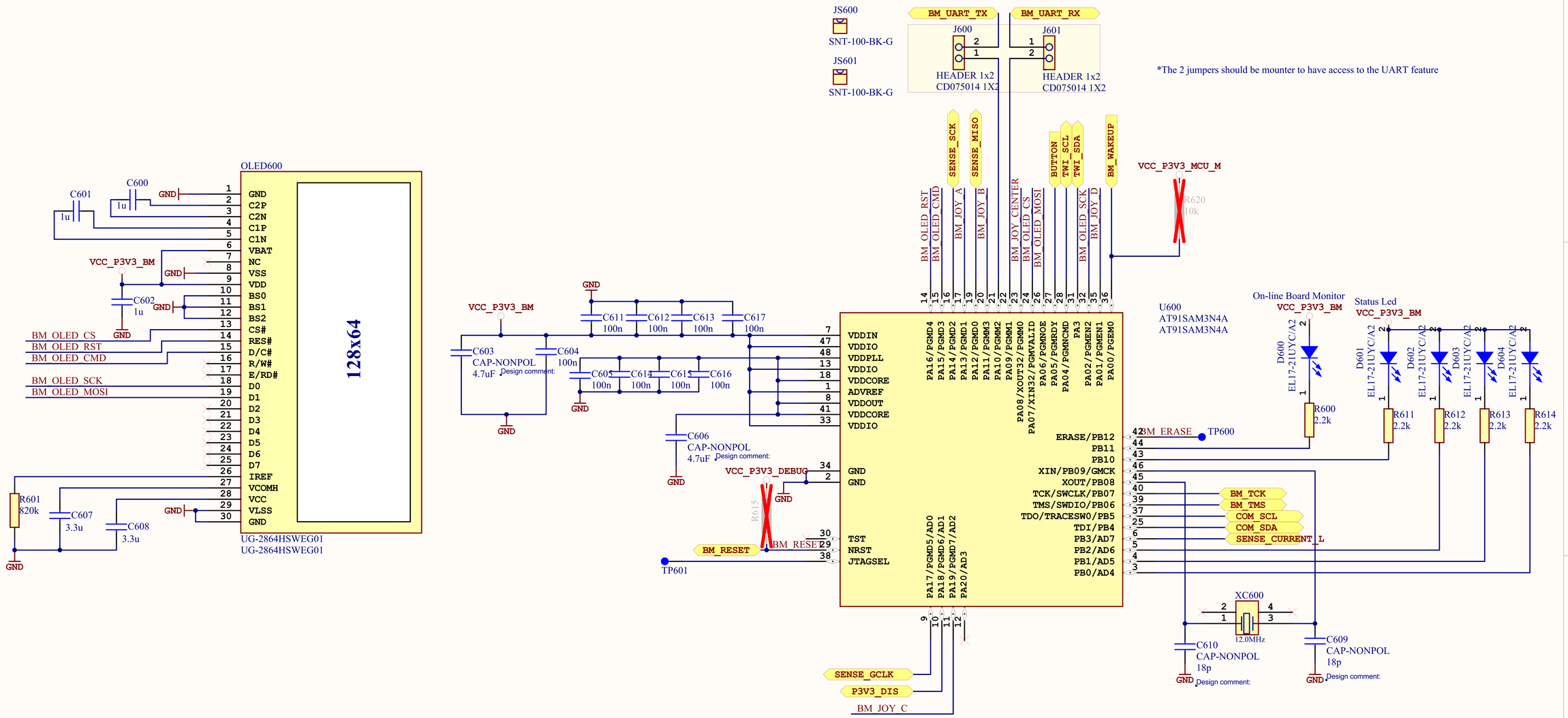

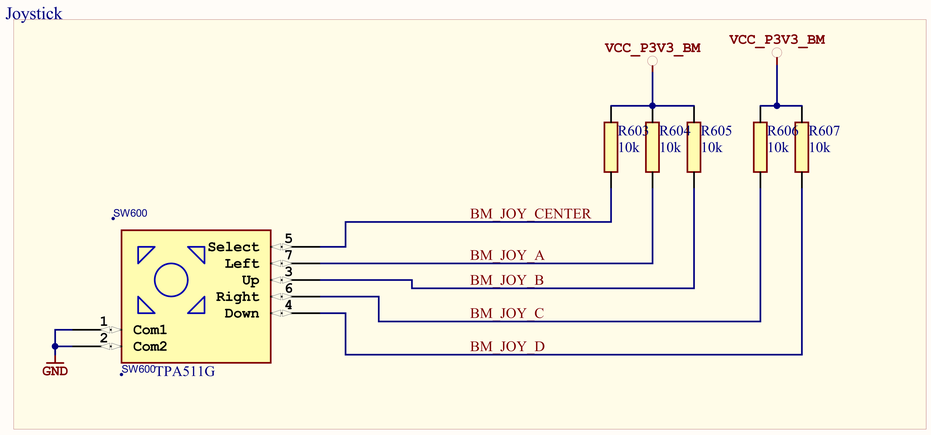

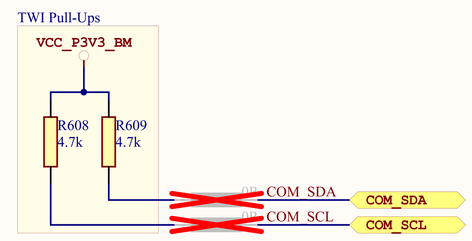

ATMEL Nantes	*		
	*		
	*		
Date:	8/29/2012	1:18:28 PM	PAGE: 7 of 7
Document number:	8		Revision: 2
TITLE: SAM4L-EK			
Board_monitor.SchDoc			

DESIGN INFORMATION BOARD NAME: SAM4L-EK.PcbDoc

BOARD TECHNOLOGY
0.15 / 0.8 / 0.15
(MIN. TRACK / PADS / CLEARANCE)

BOARD SIZE (REFER ALSO PROFILING INFORMATION)
130 X 70 (mm)

MINIMUM ANNULAR RING 0.05MM (0.002") EXTERNAL PER IPC-2221 CLASS 3 LEVEL C AND IS THE MANUFACTURING REGISTRATION ALLOWANCE

LAND SIZE CALCULATION MINIMUM - NOMINAL HOLE SIZE + 0.508MM (0.020")

CIRCUIT TYPE: [ ] SS [ ] DS [X] PTH ML [X] No. of Layers 6

FINGER CONNECTOR DIM PER: [ ] AS SHOWN
No. OFF TOTAL [ ] ONE SIDE [ ] BOTH SIDES

VIAS: [ ] NONE [ ] FEED THRU' [X] TENTED [ ] BURIED LAYER SEQUENCE
[ ] UNIQUE DRILL [ ] 2 SIZE [ ] BLIND LAYER SEQUENCE

LAYER CONSTRUCTION PER: Layer Stack Manager (PCB) [X] AS SHOWN

ARTWORK: [ ] MANUAL [ ] DIGITISED [X] CAD TYPE Altium Summer 09

ARTWORK/PATTERN MASTER LIST

DESCRIPTION	DRAWING No./CAD FILE REF.		LAYER NAME	GERBER FILE REF	
PCB FILE	SAM4L-EK	PcbDoc			
GERBER FILE		GTP	Top Paste Mask		GTP
GERBER FILE		GTO	Top Overlay		GTO
GERBER FILE		GTS	Top Solder Mask		GTS
GERBER FILE		GTL	Top Layer	Board Layer 1	GTL
GERBER FILE		G1	Mid Layer 1 (GND)	Board Layer 2	G1
GERBER FILE		G2	Mid Layer 2	Board Layer 3	G2
GERBER FILE		G3	Mid Layer 3	Board Layer 4	G3
GERBER FILE		G4	Mid Layer 4 (POWER)	Board Layer 5	G4
GERBER FILE		GBL	BOTTOM LAYER	Board Layer 6	GBL
GERBER FILE		GBS	Bottom Solder Mask		GBS
GERBER FILE		GBO	Bottom Overlay		GBO
GERBER FILE		GBP	Bottom Paste Mask		GBP
GERBER FILE		GM1	Dimension		GM1
GERBER FILE		GD1	Drill Drawing		GD1
GERBER FILE					
GERBER FILE					
APERTURE LIST		APR			
DRILL REPORT		DRR			
DRILL FILE		DRL			
EXCELLON DRILL		TXT			

MATERIAL: [X] GLASS FIBRE EPOXY RESIN NEMA GRADE FR4-08 (IPC-4101) - WITH TG170
THICKNESS: [ ] 0.8mm [ ] 1.2mm [X] 1.6mm [ ] 2.4mm [ ] 3.2mm
TOLERANCE: [X] IN A/W IPC-D-300G CLASS 2 [ ] OTHER +/-
BOW & TWIST: [X] IN A/W IPC-D-300G CLASS 2 [ ] AS SHOWN
COPPER THICKNESS (FINISHED)
OUTER: [ ] 18um [X] 35um [ ] 70um
INNER SIGNAL: [ ] 18um [X] 35um [ ] 70um
INNER PWR: [ ] 18um [X] 35um [ ] 70um
STRUCTURE: [ ] REFER
[ ] AS PER DRAWING No. [X] AS SHOWN

DRILLING:
VIEWED FROM: [X] COMPONENT SIDE [ ] SOLDER SIDE
REFERENCE: [X] AS SHOWN [ ] PATTERN MASTER LIST [X] NC_DRILL FILES
PTH MINIMUM COPPER THICKNESS: [X] 20um [ ] OTHER
NPTH: [X] TENTED [X] PADS REMOVED [ ] REMOVE PADS
[ ] 2nd DRILL [ ] BOTH [ ] AS SHOWN [ ] NONE
BOARD FINISH: [X] ETCHING [ ] REFER PATTERN MASTER LIST
LEGEND / SCREEN PRINT: [ ] NONE [X] COMPONENT [X] SOLDER
COLOUR: [X] WHITE [ ] YELLOW [ ] OTHER
SOLDER RESIST: [X] LIQUID PHOTOIMAGEABLE [ ] SCREEN PRINT
FINISH: [ ] MATTE [X] GLOSS
COLOUR: [ ] BLACK [ ] GREEN [ ] YELLOW [X] BLUE [ ] OTHER
TRACK FINISH: [ ] SELECTIVE SOLDER (HASL) [ ] REFLOW SOLDER
[X] 0.1um - 0.2um ELECTROLESS GOLD OVER 3um NICKEL
[ ] IMMERSION GOLD [ ] OTHER
EDGE BOARD CONTACTS: [ ] 1.3um HARD GOLD OVER 5um NICKEL / TIN-NICKEL
[ ] HARD FINISH GOLDE PLATE [ ] OTHER
[ ] AS SHOWN [ ] REFER
PROFILING: [X] AS DIMENSIONED, MEASURED AND CUT FROM SPECIFIED DATUM.
[ ] REFER PCB BLANK DWG No.
[ ] USE PROFILE / ROUTE TAPE SUPPLIED (REFER PATTERN MASTER LIST)
[ ] SQUARE CUT [ ] N.C. ROUTE [X] V. SCORE [ ] BLANK
ACCEPTABILITY: MATERIALS AND WORKMANSHIP FOR ALL PRINTED WIRING BOARDS TO MEET OR EXCEED THE REQUIREMENTS OF:
[X] IPC-6011/12 AND IPC-A-600E [ ] 1 [X] 2 [ ] 3
[X] UL CERTIFICATION [ ] AUSTEL
[ ] ML-P-55110F GRP [ ] A [ ] B [ ] AS2546 [ ] OTHER

ADDITIONAL REQUIREMENTS:
MICROSECTION: [X] NONE [ ] SAMPLE PLAN [ ] MIL-P-55110E SERIAL Nos. PER ORDER
CERTIFICATION: [ ] NONE [ ] MIL-P-55110E GRP [ ] A [ ] B [ ] IPC CLASS [ ] 1 [ ] 2 [ ] 3
RoHS Compliant: [X] [X] QUALITY RELEASE REPORT [ ] OTHER
ELECTRICAL TEST: [ ] NONE [X] REQUIRED (100% PADS & NETS) [ ] PER ORDER
SURFACE MOUNT: [ ] NONE [ ] 1 SIDE [X] 2 SIDES [ ] MIN. PITCH 0.6mm
MANUFACTURER'S ID/LOGO: [ ] NONE [ ] FOIL [X] LEGEND [X] REFER Bottom Overlay
MANUFACTURER'S ACCREDITATION: [X] ISO9001/AS3901 [ ] NONE
PACKAGING AND HANDLING: [X] PER ORDER [ ] REFER

Notes

1. All dimensions are in mm.
2. The router cutter diameter is 1.2mm.
3. Impedance control traces on Top Layer (90ohm differential) for 0.18mm trace.

Mechanical Dimentions:

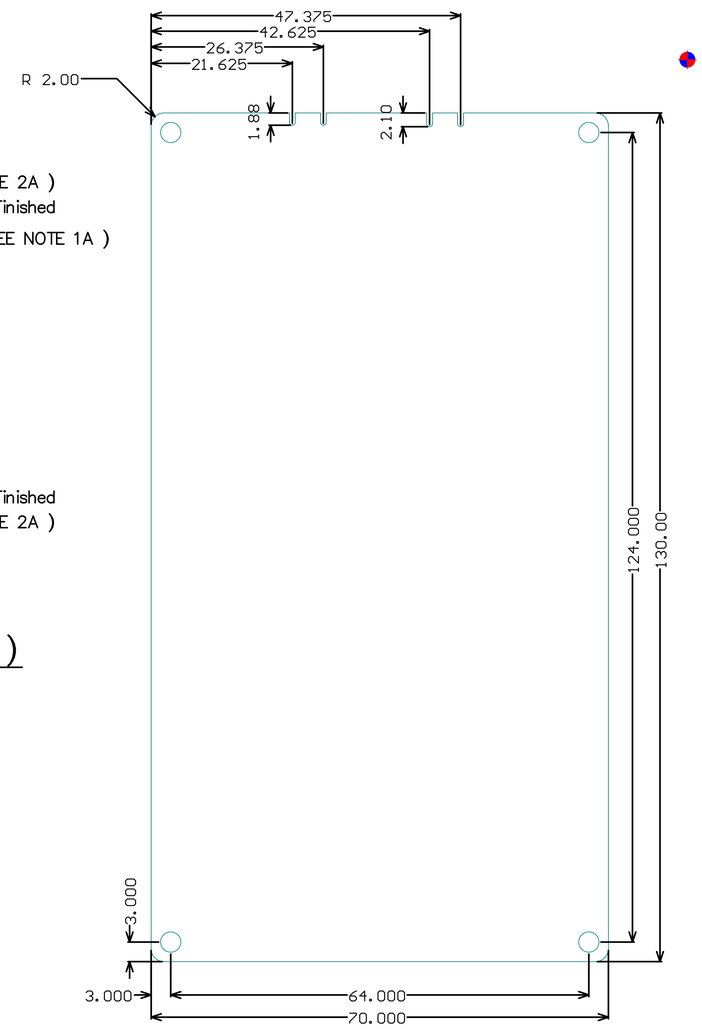

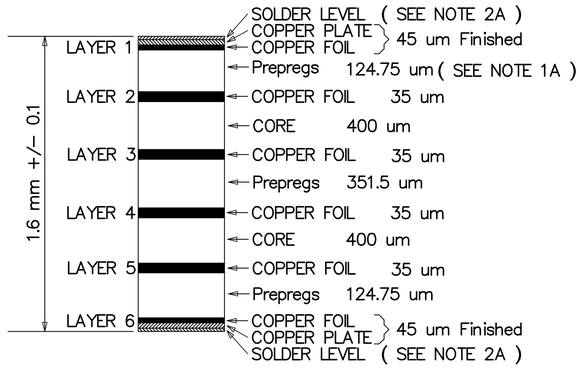

NOTE 1A: DIELECTRIC FR4
2A: SURFACE PROTECTION: HASL

THE BOARD MUST BE RoHS COMPLIANT

DETAIL A (CROSS-SECTION)

SCALE = NONE

L1 Top Layer
L2 Ground
L3 Signal Layer
L4 Signal Layer
L5 Power
L6 Bottom Layer

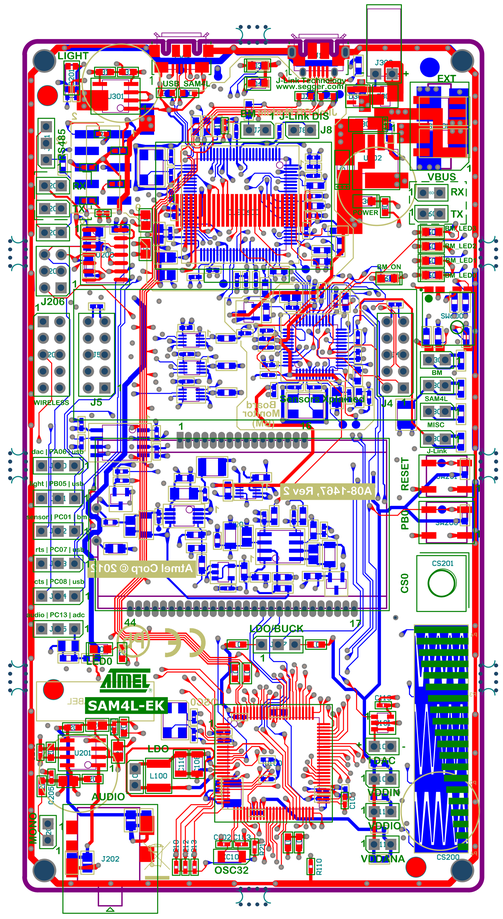

ATTENTION VOIR PANEL POUR FABRICATION

ATMEL FRANCE
La Chantrerie
BP 70602
44306 NANTES

ENGINEER:	TITLE:	SAM4L-EK A08-1467	
PCB DESIGNER:			
DATE: 8/29/2012	PART NO.:		REV: 2
FILE NAME: SAM4L-EK.PcbDoc	DWG NO:		SCALE: 1:1

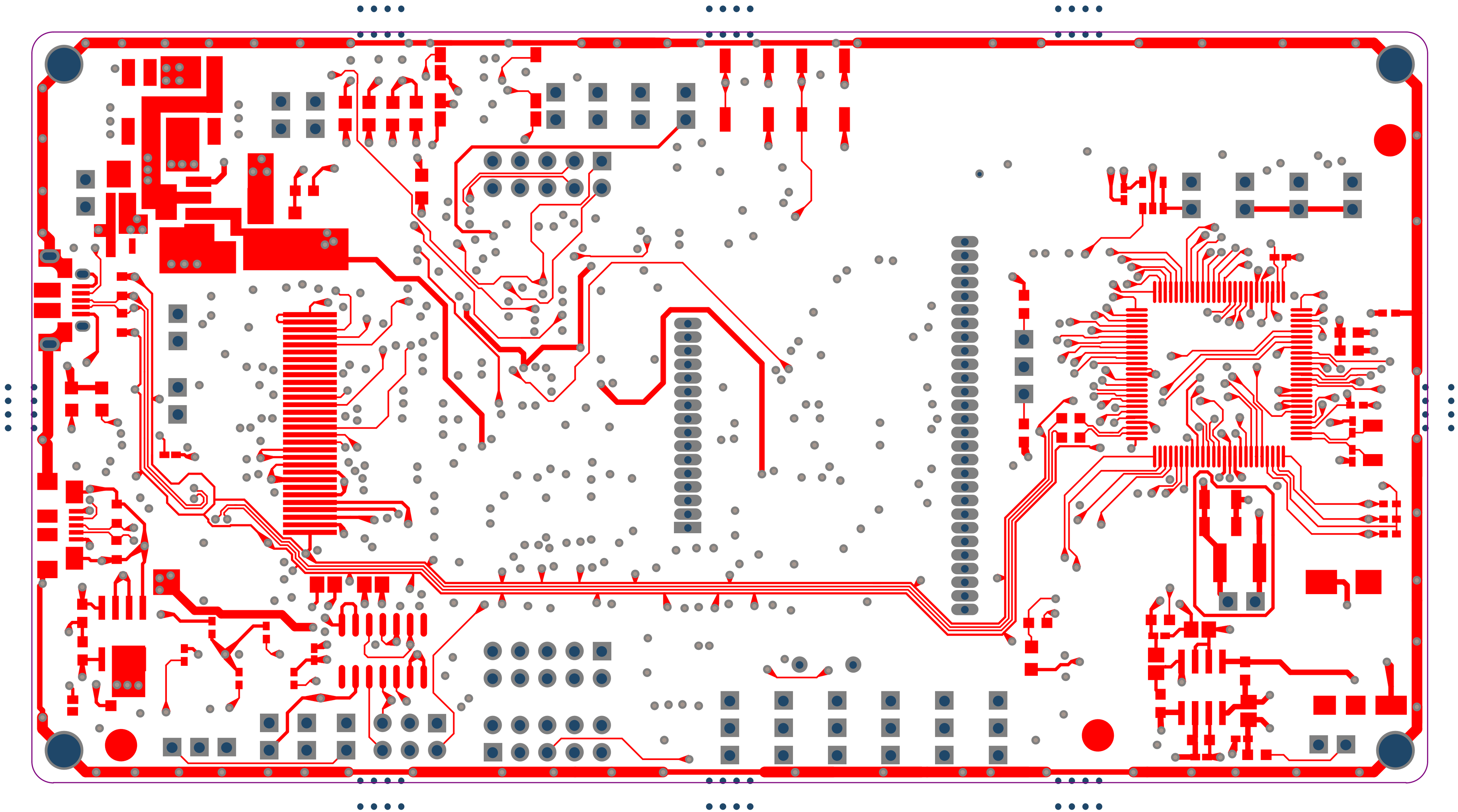

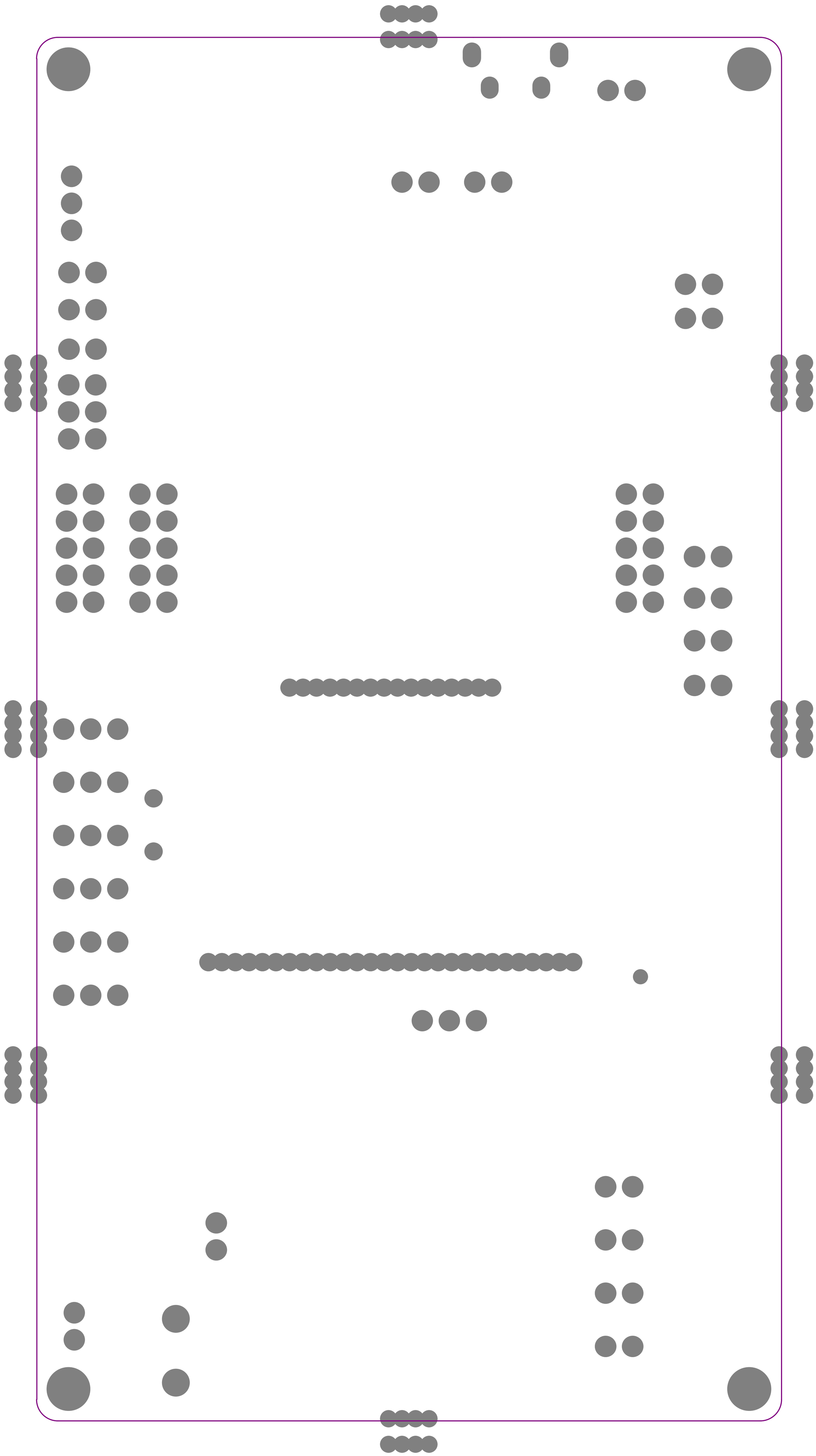

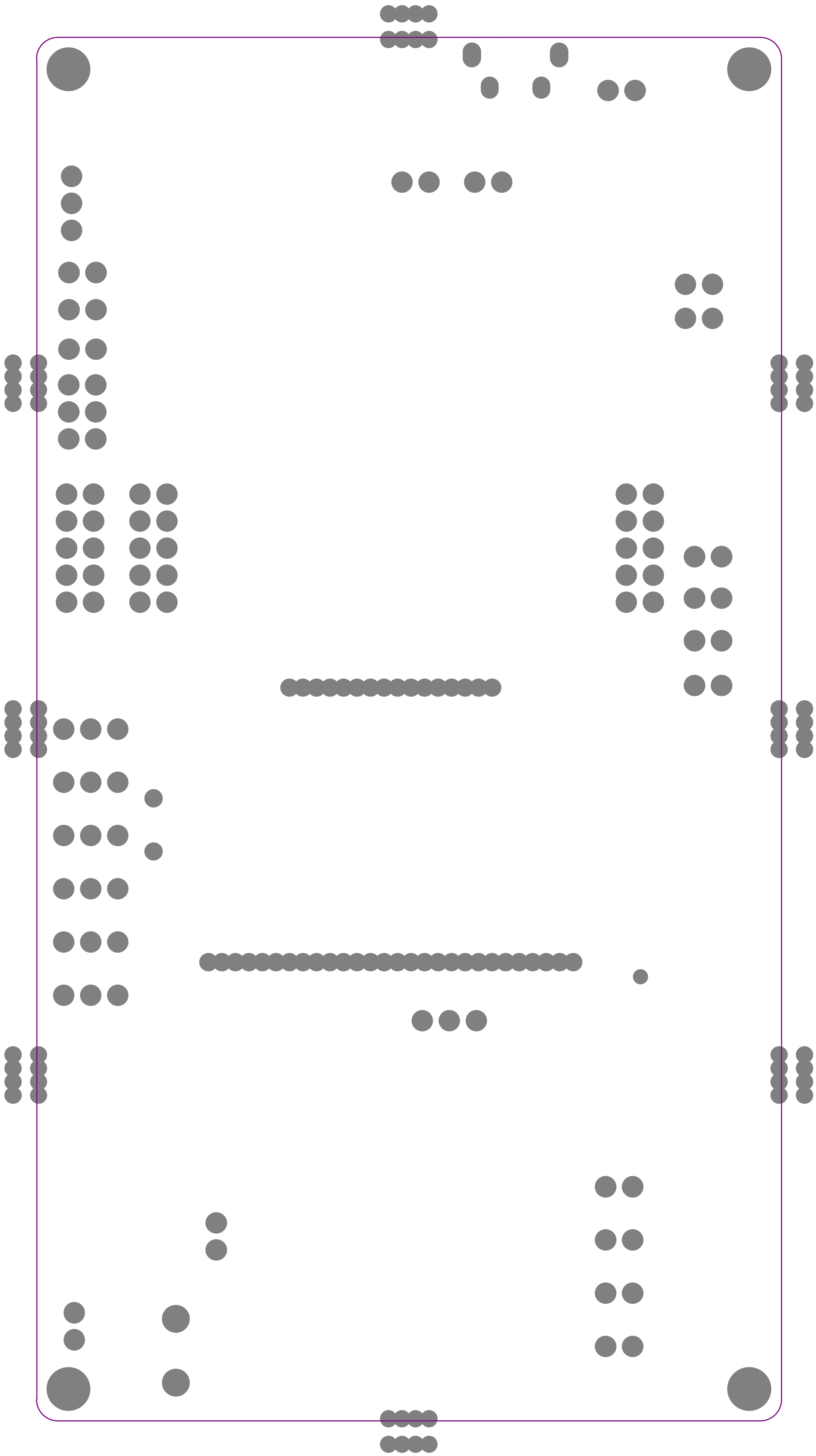

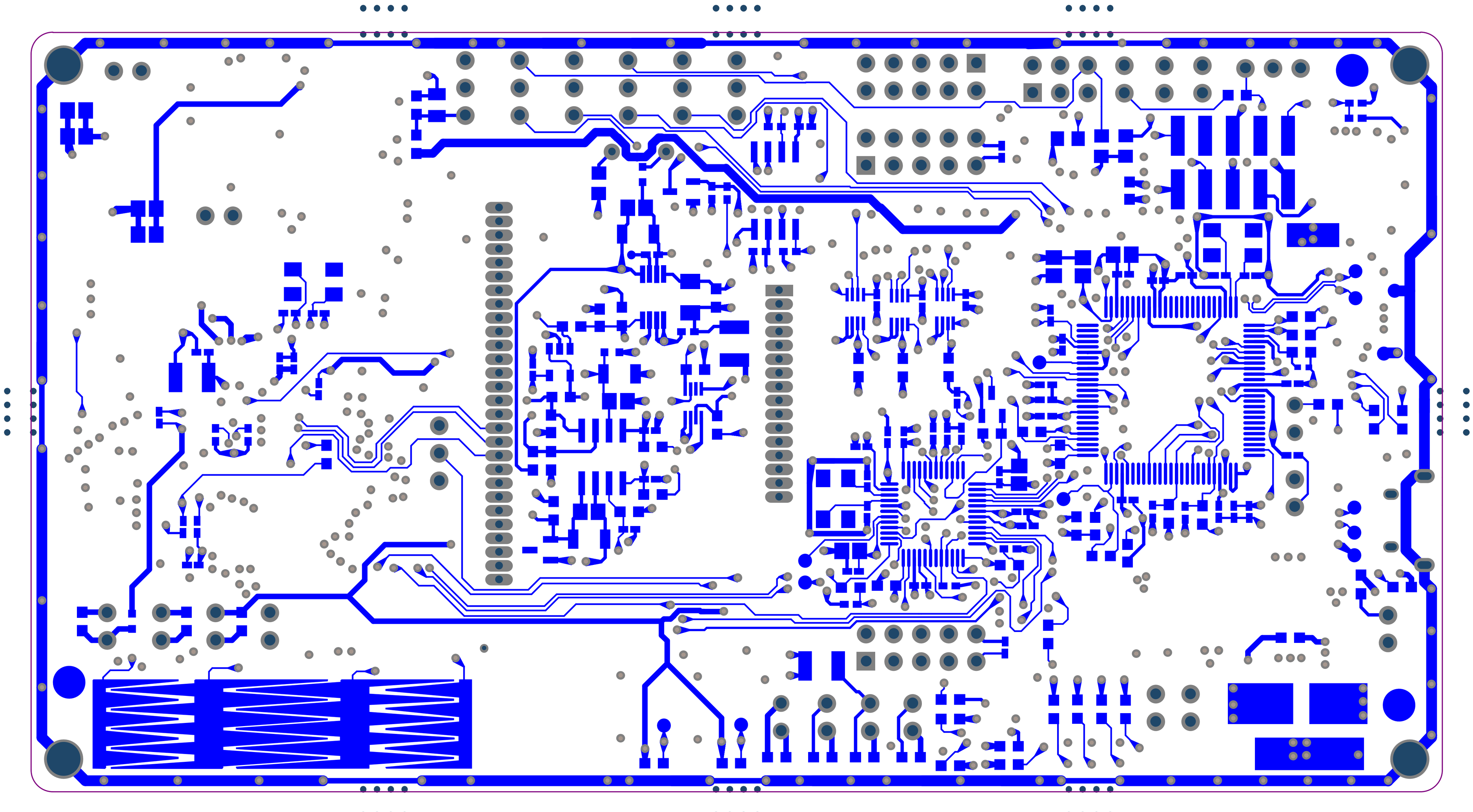

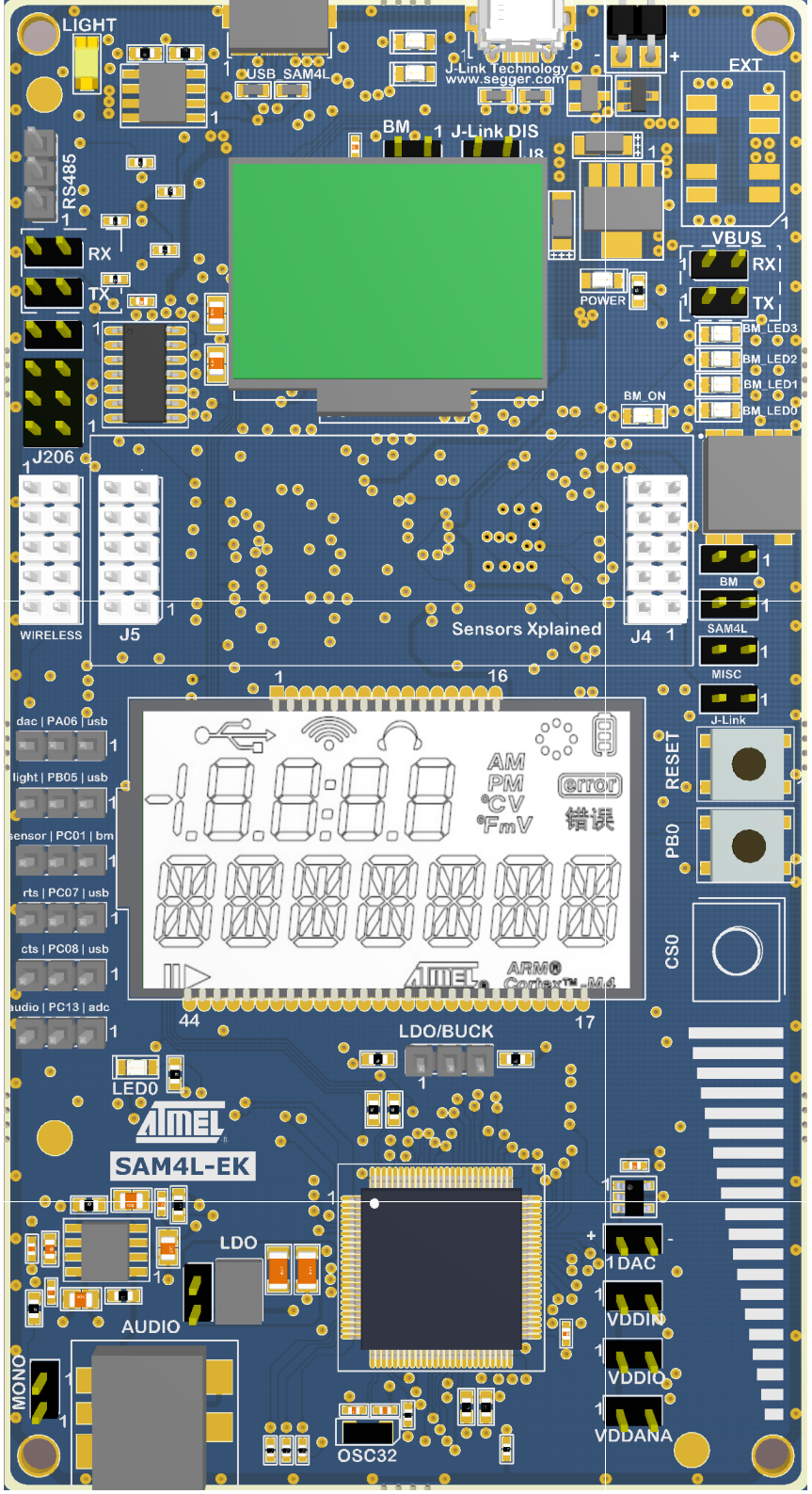
LIGHT
USB SAM4L
J-Link Technology
www.segger.com
EXT
BM
J-Link DIS
RS485
RX
TX
VBUS
POWER
BM_LED3
BM_LED2
BM_LED1
BM_LED0
BM_ON
J206
WIRELESS
J5
Sensors Xplained
J4
BM
SAM4L
MISC
J-Link
RESET
PB0
CS0
dac | PA06 | usb
light | PB05 | usb
sensor | PC01 | bm
rts | PC07 | usb
cts | PC08 | usb
audio | PC13 | adc
AM
PM
°C V
°F mV
error
错误
ARM®
Cortex™-M4
LDO/BUCK
LED0
SAM4L-EK
LDO
AUDIO
MONO
DAC
VDDIN
VDDIO
VDDANA
OSC32

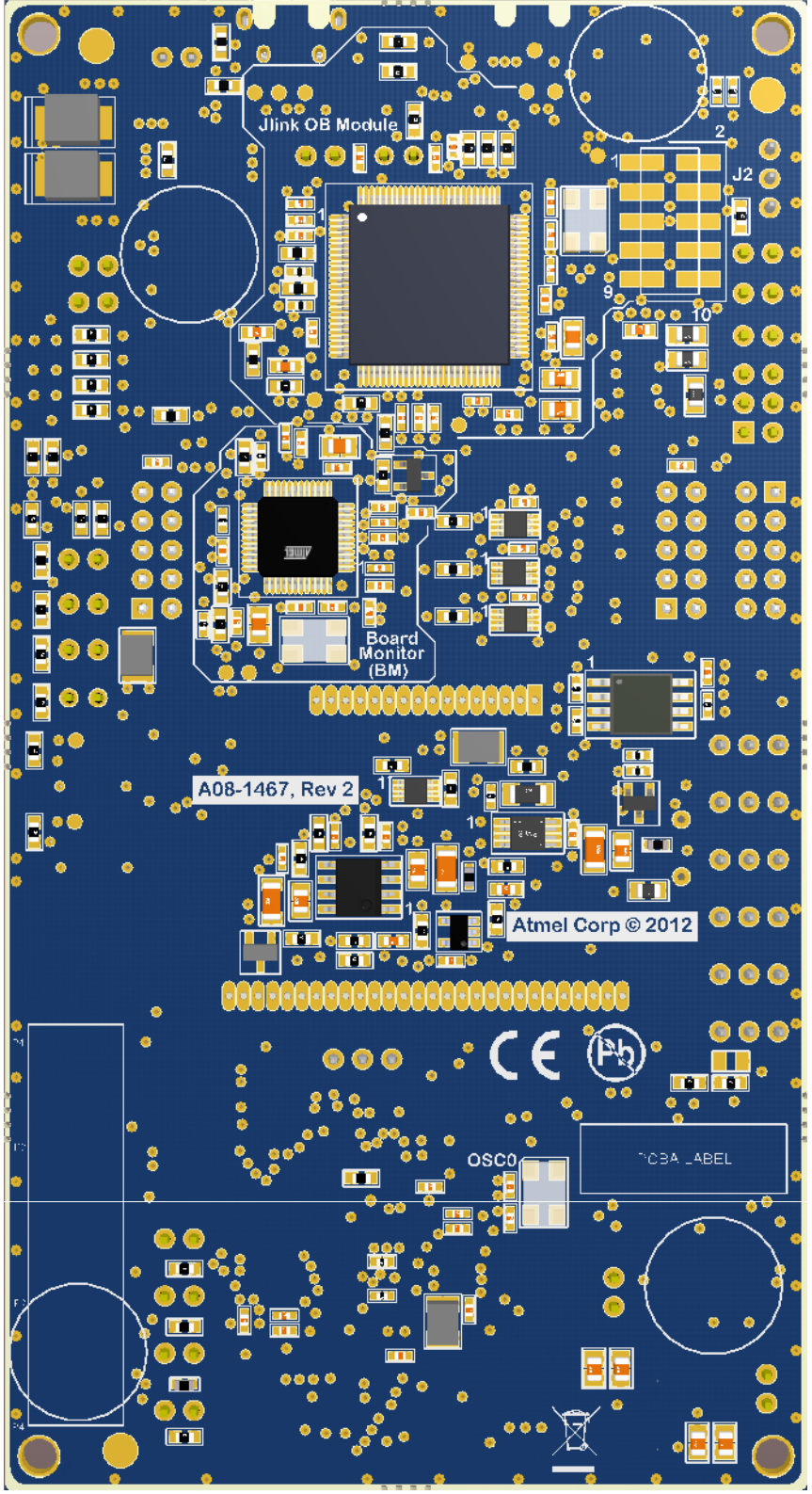
Jlink OB Module
J2
Board
Monitor
(BM)
A08-1467, Rev 2
Atmel Corp © 2012
OSC0

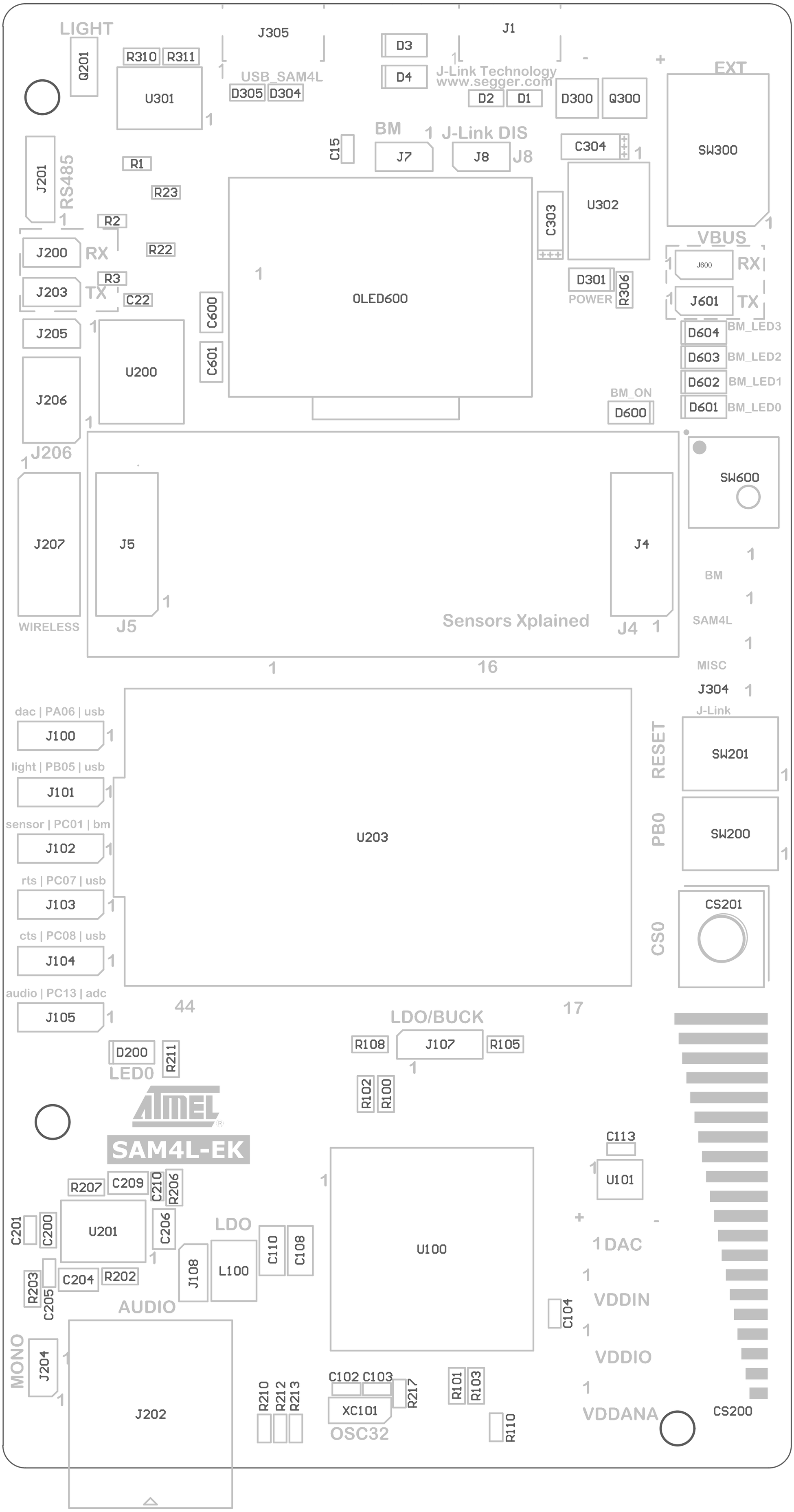
LIGHT
Q201
R310
R311
U301
J305
USB_SAM4L
D305
D304
D3
D4
J1
J-Link Technology
www.segger.com
D2
D1
D300
Q300
EXT
SW300
BM
J7
J-Link DIS
J8
C15
C304
U302
C303
OLED600
D301
POWER
R306
VBUS
J600
RX
J601
TX
D604
BM_LED3
D603
BM_LED2
D602
BM_LED1
D601
BM_LED0
BM_ON
D600
J201
RS485
R1
R23
R2
R22
J200
RX
R3
J203
TX
C22
J205
U200
C600
C601
J206
J207
WIRELESS
J5
Sensors Xplained
J4
SW600
BM
SAM4L
MISC
J304
J-Link
dac | PA06 | usb
J100
light | PB05 | usb
J101
sensor | PC01 | bm
J102
rts | PC07 | usb
J103
cts | PC08 | usb
J104
audio | PC13 | adc
J105
U203
RESET
SW201
PB0
SW200
CS0
CS201
LDO/BUCK
R108
J107
R105
R102
R100
D200
R211
LED0
SAM4L-EK
C113
U101
R207
C209
C210
R206
U201
C201
C200
C206
LDO
J108
L100
C110
C108
U100
DAC
VDDIN
VDDIO
VDDANA
C104
R203
C205
C204
R202
AUDIO
MONO
J204
J202
R210
R212
R213
C102
C103
XC101
R217
OSC32
R101
R103
R110
CS200

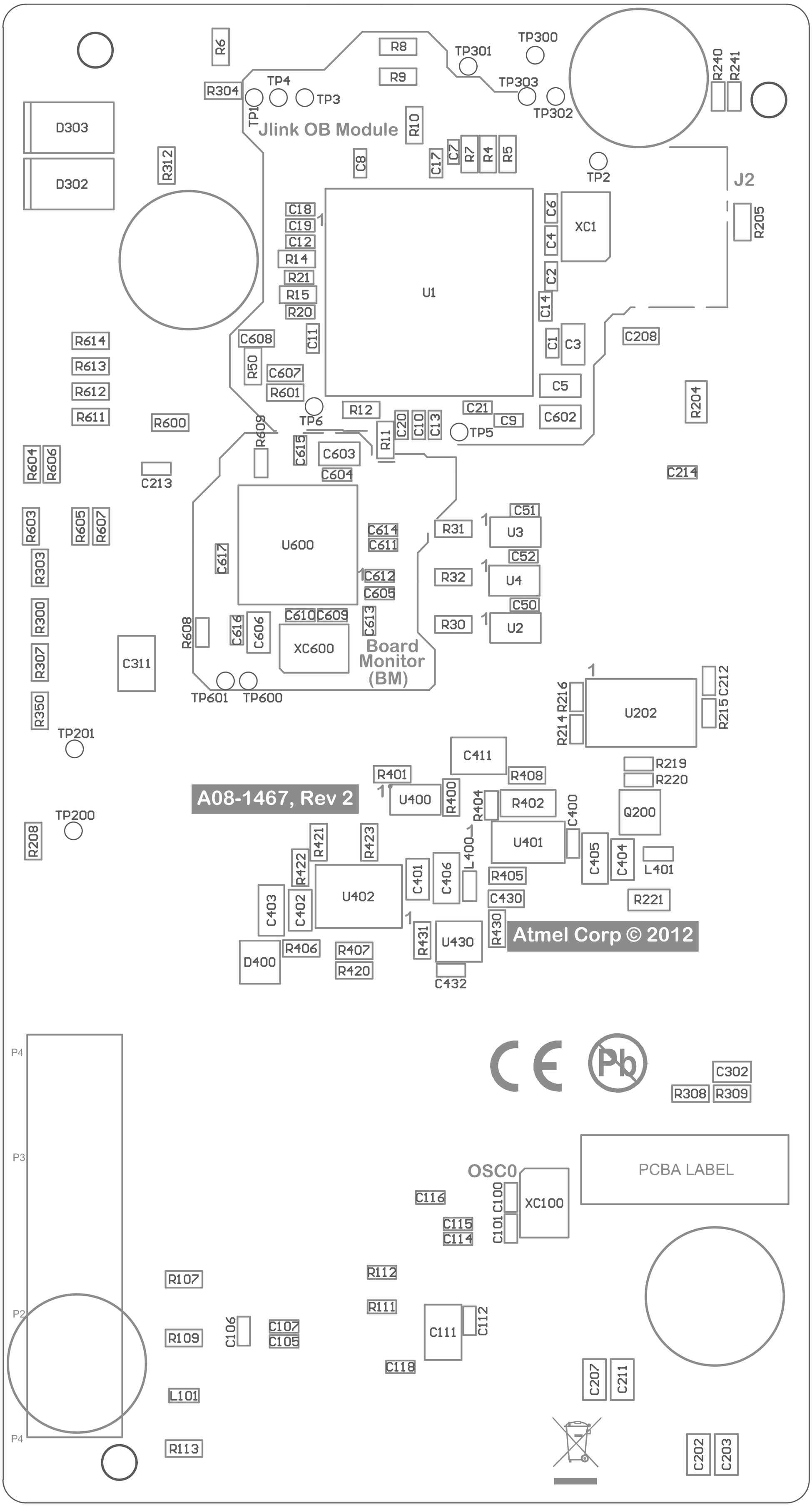
Jlink OB Module
Board Monitor (BM)
A08-1467, Rev 2
Atmel Corp © 2012
PCBA LABEL
OSC0
U1
U600
U202
U400
U401
U402
U430
XC1
XC600
XC100
J2
D303
D302
D400
Q200
TP1
TP2
TP3
TP4
TP5
TP6
TP300
TP301
TP302
TP303
TP600
TP601
TP200
TP201
P2
P3
P4

Designator	Quantity	MPN	Manufacturer	Value	Description
C1, C2, C8, C10, C11, C12, C13, C14, C15, C17, C18, C19, C20, C21, C22, C50, C51, C52, C104, C105, C106, C107, C112, C113, C115, C116, C118, C212, C213, C214, C400, C432, C604, C605, C611, C612, C613, C614, C615, C616, C617	41	C0402C104K4RACTU	Kemet	100n	Ceramic capacitor, SMD 0402, X7R, 16V, +/-10%
C3, C5, C603, C606	4	GRM21BR61E475KA12L	Murata	4.7uF	Ceramic capacitor, SMD 0805, X5R, 25V, ±10 %
C4, C6, C609, C610	4			18p	Ceramic capacitor, SMD 0402, NP0, 50V, +/-5%
C7	1	ECJ0EC1H100D	Panasonic	10pF	Ceramic capacitor, SMD 0402, NP0, 50V, +/-5% (de16674)
C9	1			10n	Ceramic capacitor, SMD 0402, X7R, 25V, +/-10%
C100, C101	2	CM05CG120J50AH	Kyocera-elco	12pF	Ceramic capacitor, SMD 0402, NP0, 50V, +/-5% (de19810)
C102, C103	2			15p	Ceramic capacitor, SMD 0402, NP0, 50V, +/-5%
C108	1	EMK316BJ475ML-T	Taiyo Yuden	4.7u	Ceramic capacitor, 4.7 uF, SMD 1206, X5R, 16V, 20%
C110	1	X7R1206JTTD104K	KOA	100nF	Ceramic capacitor, SMD 1206, X7R, 200V, ±10%
C111, C311, C411	3	GRM32ER61C476ME15	Murata	47u	Ceramic capacitor, SMD 1210, X5R, 16V, ±20 %
C114, C201	2	GRM155R60J475ME87D	Murata	4.7uF	Ceramic capacitor, SMD 0402, X5R, 6.3V, +/-20%
C200, C208	2	06033YC104KAT2A	AVX	100n	Ceramic capacitor, SMD 0603, X7R, 16V, ±10 %
C202, C203, C207, C211	4	C2012X5R0J476M	tdk	47uF/6.3V	Ceramic capacitor, SMD 0805, X5R, 25V, ±20%
C204, C206, C209, C600, C601, C602	6			1u	Ceramic capacitor, SMD 0805, Y5V, 10V, -20/+80 %
C205, C210	2			220p	Ceramic capacitor, SMD 0402, X7R, 50V, +/-10%
C302	1	CL21C102JBCNNNC	Samsung	1nF	Ceramic capacitor, SMD 0805, C0G, 25V, 5%, (de7778)
C303, C304	2	TR3A106K016C1700	vishay	10u	SMD tantalum capacitor, ESR = 1.7, 3216-18 (EIA) 1206,
C401, C402, C404	3			100n	Ceramic capacitor, SMD 0805, X7R, 50V, ±10 %
C403, C405, C406	3	GRM31CR71C106KA12L	Murata	10u	Ceramic capacitor, SMD 1206, X7R, 16V, ±10 %
C430	1	06031A101FAT2A	AVX	100p	Ceramic Cap, 100pF, 100V, +-1 0603, NPO
C607, C608	2	C0603C339M9PACTU	Kemet	3.3u	Ceramic capacitor, SMD 0603, X5R, 6.3V, ±20 %
C6200	1			SLIDER_35MM_MATRIX_4CH	SLIDER_35MM_MATRIX_4CH
D1, D2, D304, D305	4	PGB1010603NR	Littelfuse	PGB1010603	ESD Suppressor
D3, D4, D200, D600, D601, D602, D603, D604	8	EL17-21UYC/A2	Everlight	EL17-21UYC/A2	LED, Yellow, Wave length=591nm SMD0805 ±70°
D300	1	BAS16	Fairchild	BAS16	high-speed switching diode, V(rrm)=85V, I(f)=0.25A, V(f)=0.7 (at If = 0.01A), Ir)=1uA (at Vrrm) trr)=4ns SMD SOT23
D301	1	EL17-21USOC	Everlight	EL17-21USOC	LED, Orange, Wave length=620nm, SMD0805, ±70°
D302, D303	2	MBRS140T3G	ON Semiconductor	MBRS140T3G	SMD Schottky diode, 40V, 1A
D400	1		National Instruments	LM4040BIM3-4.1	Voltage reference 4.096V, SOT-2
E1, E2, E3, E4	4	SJ-5303	3M	SJ-5303	5mm adhesive feet, diam 11.1mm
J1	1	10103592-0001LF	FCI	10103592-0001LF	Micro USB B Connector
J4, J5, J207	3	CD075014 2X5	Freber	CD075014 2X5	2x5 pin header, 2.54 mm pitch, P in-Paste THM
J8, J108, J200, J203, J204, J205, J800, J801	8	CD075014 1X2	Freber	CD075014 1X2	1x2 pin header, 2.54 mm pitch, P in-Paste THM
J100, J101, J102, J103, J104, J105, J107, J201	8	15-08310	Freber	CD075014 1X3	1x3 pin header, 2.54 mm pitch, P in-Paste THM
J202	1	161-2805-E	Mouser	161-2805-E	SMD 3.5 mm stereo phone jack
J206	1	MTSW-103-08-L-D-276	SAMTEC	MTSW-103-08-L-D-276	2x3 pin header, 2.54 mm pitch, THM
J305	1	CX62R-AB-5P	HIROSE	CX62R-AB-5P	Micro USB AB Connector
JS3, JS100, JS101, JS102, JS103, JS104, JS105, JS106, JS107, JS200, JS201, JS202, JS203, JS600, JS601	15	SNT-100-BK-G	SAMTEC	SNT-100-BK-G	Jumper cap for 2.54mm pinheade
L100	1	LQH43CN220K03L	Murata	LQH43CN220K03L	Power Inductor 1812 22uH
L101, L400, L401	3	BLM18HE152SN1	Murata	BLM18HE152SN1	SMD RF inductor 0603. Z=1500Ohm (@100MHz), Max R(dc)=0.50Ohm, Max current=500mA
OLED600	1	Univision #UG-2864HSWEG01		UG-2864HSWEG01	OLED Display 128x64 resolution
PCB1	1			A08-1467	SAM4L-EK PCB
Q200	1	2N7002	Fairchild	2N7002	N-Channel MOSFET. 60V, 0.115 continuous, 0.8A Peak. RDS(ON 7.5Ohm@VGS=5.0V, VGS(th)<3
Q201	1	TEMT6000	vishay	TEMT6000	light sensor
Q300	1	SI2307CDS	Vishay	SI2307CDS	P-Channel Power MOSFET 30V 2.7A continuous 12A peak
R1, R2, R3, R20, R21, R22, R23, R210, R212, R213, R214, R215, R216, R217	14			100k	Thick film resistor, SMD 0402, 1/16W, 1%
R4, R5, R100, R102	4	RK73H1JTTD39R0F	KOA	39R	Thick film resistor, SMD 0603, 1/10W, 1%
R6, R310, R311	3			47k	Thick film resistor, SMD 0603, 1/10W, 1%
R7	1	RK73H1JTTD6801F	KOA	6.8k	Thick film resistor, SMD 0603, 1/10W, 1%
R8, R9, R211, R306, R600, R611, R612, R613, R614	9			2.2k	Thick film resistor, SMD 0603, 1/10W, 1%
R10, R105, R108, R304, R308, R309, R312, R400, R603, R604, R605, R606, R607	13	RK73H1JTTD1002F	KOA	10k	Thick film resistor, SMD 0603, 1/10W, 1%
R11, R12, R14, R15	4			150R	Thick film resistor, SMD 0603, 1/10W, 1%
R30, R31, R32, R401, R405	5			100k	Thick film resistor, SMD 0603, 1/10W, 1%
R50, R107, R109, R113, R300, R303, R307, R350, R420, R421, R422, R423, R430, R431	14			0R	Thick film resistor, SMD 0603, 1/10W, 1%
R101, R601	2			820k	Thick film resistor, SMD 0603, 1/10W, 1%
R103	1			1M	Thick film resistor, SMD 0603, 1/10W, 1%
R110	1			0R	Thick film resistor, SMD 0402, 1/16W, 1%
R202, R203, R206, R207	4			20k	Thick film resistor, SMD 0603, 1/10W, 1%
R204	1			47k	Thick film resistor, SMD 0805, 0.125W, 1%
R205	1			120R	Thick film resistor, SMD 0603, 1/10W, 1%
R208	1	06035C102KAT2A	AVX	1n	Ceramic capacitor, SMD 0603, X7R, 50V, ±10 %
R219	1			100R	Thick film resistor, SMD 0402, 1/16W, 1%
R220	1	RK73H1ETTP1004F	KOA	1M	Thick film resistor, SMD 0402, 1/16W, 1%
R221	1			75R	Thick film resistor, SMD 0805, 0.125W, 1%
R240, R241, R608, R609	4			4.7k	Thick film resistor, SMD 0402, 1/16W, 1%
R402	1			4.7R	Thick film resistor, SMD 1206, 1/4W, 1%
R404	1			820R	Thick film resistor, SMD 0402, 1/16W, 1%
R406	1	RK73H1JTTD1001F	KOA	1k	Thick film resistor, SMD 0603, 1/10W, 1%
R407	1			8.2k	Thick film resistor, SMD 0603, 1/10W, 1%
SW200, SW201	2	SKRAAKE010	ALPS	SKRAAKE010	6.2x6.2 mm SMD tact switch, sa as A08-0091 but less force is needed
SW300	1	MMS 228 T	Knitter-Switch	MMS 228 T	Slide Switch, Knitter, 2 Pos 2 Pol SMD
SW600	1	TPA511G	ITT cannon	TPA511G	SMD navigation tact switch 9.3*9mm
U1	1	ATSYSAM3U4E-CU	ATMEL	SAM3xxxx-AU	ARM Cortex 3 32-bit MCU
U2, U3, U4, U400	4	TS5A3154DCUR	Texas Instruments	TS5A3154DCUR	0.9R SPDT Analog switch,USB(BSOP)
U100	1	ATSAM4LC4CA-AU	ATMEL	ATSAM4L4	ARM Cortex M4 32-bit MCU
U101	1	LMV931IDBV	Texas Instruments	LMV931IDBV	Single, 1.8V Op-Amp, Rail-to-rail Input and output, SOT23-5
U200	1	ADM3491ARZ	Analog Devices	ADM3491ARZ	RS-485 Full-Duplex Transceiver, 20Mbps, 3.3V, Low Power.
U201	1	TPA152D	Texas Instruments	TPA152D	5-mW STEREO AUDIO POWER AMPLIFIER
U202	1	AT25DF641A-SH-T	ATMEL	AT25DF641A-SH-T	64-MBit, 2.7V, Serial Flash, 8-le SOIC, RapidS
U203	1	YMCC42664AAANDCL_VER2	SOONMATEL	SAM4L SAM4L-EK LCD	SAM4L SAM4L-EK LCD Display
U301	1	TPS2021D	Texas Instruments	TPS2021D	Power Distribution Switch with Current Limiter (0.6A)
U302	1	LP3872EMPX-3.3	National Semiconductor	LM3872EMPX-3.3	3.3V 1.5A Fast Ultra Low Dropo Linear Regulator
U401	1	LTC6102CMS8#PBF	Linear Technology	LTC6102	Precision Zero Drift Current Sens Amplifier
U402	1	ADS1251U	Texas Instruments	ADS1251	24-Bit, 20kHz, Low-Power ANALOG-TO-DIGITAL CONVERTER
U430	1	OPA333AIDBVTG4	Texas Instruments	OPA333AIDBVTG4	ZeroDrift Series CMOS OPERATIONAL AMPLIFIERS
U600	1			ATP1SAM3N4A	ATP1SAM3N4A
XC1, XC600	2	FQ5032B-12-C-C-C-200-1 / 738B 12	Fox. Electronics	12.0MHz	Fox FQ5032B 12.0MHz SMD crystal 738B-12
XC100	1	405C35B12M00000	CTS communications	12 MHz	CRYSTAL 12.000000 MHZ 13PF SMD
XC101	1	FC-145 32.7680KA-A0 / Q13FC1	Epson Toyocom	Q13FC1450000614	32kHz crystal, SMD, 4.1x 1.5 m