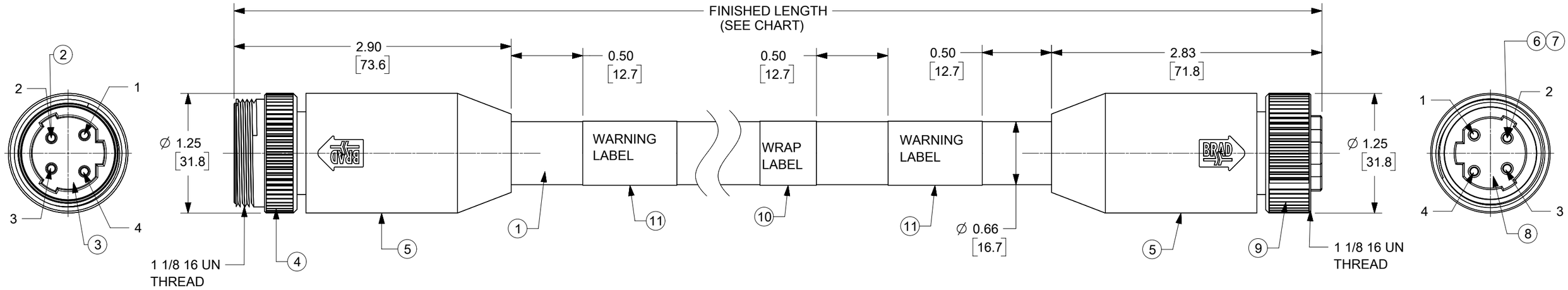

NOTE:
1) MATERIAL: SEE TABLE
2) FINISHES: SEE TABLE
3) FLAG LABEL IS MARKED WITH PART No., DATE CODE, VOLTAGE AND AMPERAGE
4) ELECTRICAL DATA
   POLE: 4
   MAX. VOLTAGE: IEC60664 600V
   UL2237 600V
   MAX. CURRENT: 25A
5) ENVIRONMENTAL
   PROTECTION: IP67
   TEMPERATURE RATING: -20C TO 90C
6) PACKAGING:
   ASSEMBLIES ARE BAGGED SEPARATELY IN POLY BAGS WITH BAR CODE LABEL ATTACHED TO OUTSIDE OF BAG
7) ASSEMBLY IS RoHS COMPLIANT
8) CERTIFICATION
   UL2237
9) ADDITIONAL CABLE INFORMATION
   MINIMUM BEND RADIUS: 7.5X CABLE DIAMETER (0.656")
10) DIMENSIONS ARE REFERENCE UNLESS OTHERWISE SPECIFIED

WIRING DIAGRAM

1	BLACK#1	1
2	BLACK#2	2
3	BLACK#3	3
4	GREEN/YELLOW	4

PART NUMBER MATRIX

334T30K26M005A3

CABLE TYPE
12/4C AWG TYPE
SHIELDED

FINISH LENGTH
M005 = 0.5 METER
M010 = 1 METER
M100 = 10 METER

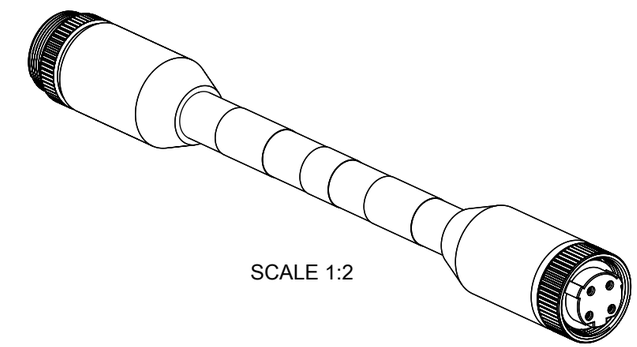

SCALE 1:2

CHART

PART NO.	ENGINEERING NO.	FINISHED LENGTH
1300620300	334T30K26M020A3	2.0M (78.7")
1300611064	304T06K26M040A3	4.0M (157.5")
1300611065	304T06K26M060A3	6.0M (236.2")

ITEM	DESCRIPTION	MATERIAL	FINISH
11	WARNING LABEL	VINYL	MULTI COLOR
10	WRAP LABEL	VINYL	YELLOW
9	FEMALE COUPLING NUT	BRASS	NICKEL PLATED
8	4P FEMALE INSERT	TPE	BLACK
7	SOCKET SLEEVE	STAINLESS STEEL	
6	SOCKET CONTACT	BRASS	GOLD PLATED
5	OVER MOLD	TPE	GRAY
4	MALE COUPLING NUT	BRASS	NICKEL PLATED
3	4P MALE INSERT	TPE	BLACK
2	PIN CONTACT	BRASS	GOLD PLATED
1	12/4C AWG SHIELDED, VFD	TPE JACKET, XLPE INSUL	BLACK

CABLE LENGTH TOLERANCES
>.3M [1FT]: +19mm-0 [+.75in-0]
.3 - .9M [1 - 3FT]: +44.5mm-0 [+1.75in-0]
.9 - 1.8M [3 - 6FT]: +55.6mm-0 [+2.19in-0]
1.8 - 3.7M [6 - 12FT: +88.9mm-0 [+3.50in-0]
3.7 - 7.3M [12 - 24FT]: +165.1mm-0 [+6.50in-0]
7.3-14.6M [24 - 48FT]: +317.5mm-0 [+12.50in-0]
14.6 - 30.5M [48-100FT]: +622.3mm-0 [+24.50in-0]
OVER 30M [100FT] +2% OF FINISHED LENGTH

RELEASE STATUS	P1	RELEASE DATE	2018/05/03 13:34:18

QUALITY SYMBOLS
FA = 0
FC = 0
FP = 0
▼ = 0
C = 0
☒ = 0
■ = 0
V = 0

THIS DRAWING CONTAINS INFORMATION THAT IS PROPRIETARY TO MOLEX ELECTRONIC TECHNOLOGIES, LLC AND SHOULD NOT BE USED WITHOUT WRITTEN PERMISSION

EC NO: 176042	ADD CABLE INFO	2018/05/02
DRWN: MZIELINSKI		2018/05/02
CHK'D: CCHRASTKA		2018/05/03
APPR: BWOODMAN		

B2 REV

GENERAL TOLERANCES (UNLESS SPECIFIED)
ANGULAR TOL ± °
4 PLACES ±
3 PLACES ±
2 PLACES ±
1 PLACE ±
0 PLACES ±
DRAFT WHERE APPLICABLE MUST REMAIN WITHIN DIMENSIONS

DIMENSION UNITS: HYBRID		SCALE: 1:1	
DRWN BY: TWOLDEGEBRIE		DATE: 2016/07/08	
CHK'D BY: KCOX01		DATE: 2016/11/09	
APPR BY: BWOODMAN		DATE: 2016/11/14	
DRAWING SIZE: B	THIRD ANGLE PROJECTION		

molex®

MINI CHANGE BRAD POWER(C-SIZE)
4-POLE MALE/FEMALE TRI KEY 360S 12/4C AWG
SHLD TPE BLK

PRODUCT CUSTOMER DRAWING

SERIES	MATERIAL NUMBER	CUSTOMER
130062	SEE CHART	

DOCUMENT NUMBER	DOC TYPE	DOC PART	SHEET NUMBER
1300620300	PSD	000	1 OF 1

FORMAT: tb-prod-B
REVISION: G
DATE: 2015/12/14