SWITCH COMPONENTS

Mechanical Dimensions: Inches [mm]

Tolerances ±0.012 [0.3] Unless Otherwise Specified

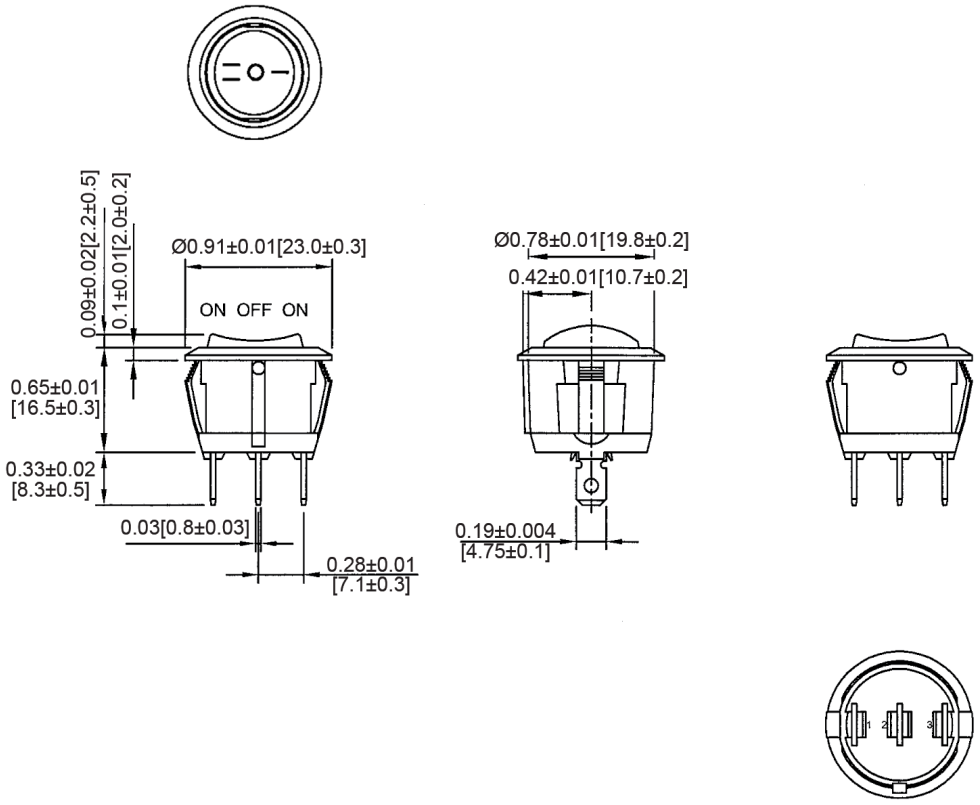

Mounting Hole

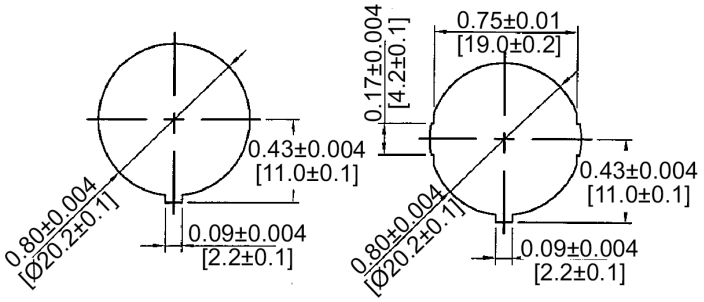

Thickness: 0.1~0.12[2.0~3.0] | 0.03~0.12[0.7~3.0]

Circuit Diagram

3P SPDT ON-OFF-ON

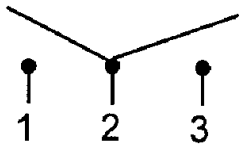

Electrical Specifications

Rating	10(4)A 125/250V AC. 10A 125V AC 6A 250V AC 10(4)A 250V AC | 16A 125V AC, 10A 250V AC
Contact Resistance	50m ohm Max
Insulation Resistance	DC 500V 100M ohm Min
Dielectric Strength	AC 1500V 1 minute
Operation Temperature	-25°C~85°C

Material Specifications

Frame	Black, Nylon 66
Actuator	Black, Nylon 66
Terminals	Copper alloy, Silver plating
Printed	White, -0=

Rocker Switch

RA1-1F-AC-2-B-5

SWITCH COMPONENTS

Rev	Date of issue	Revision Notes	Designed	Approved
B	06-08-2021	Initial Drawing	RC	OF