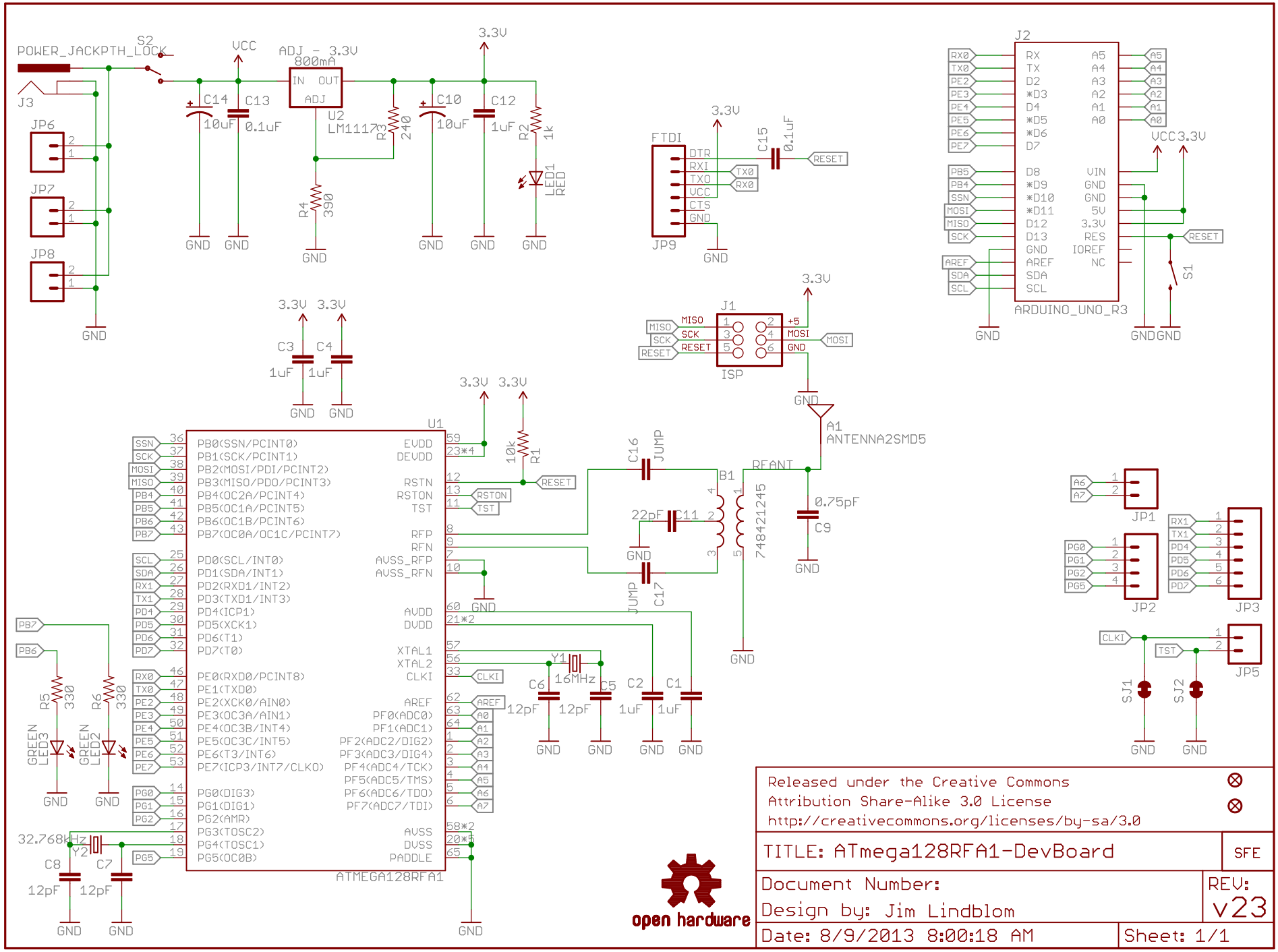

Released under the Creative Commons
Attribution Share-Alike 3.0 License
http://creativecommons.org/licenses/by-sa/3.0

TITLE: ATmega128RFA1-DevBoard

SFE

Document Number:

Design by: Jim Lindblom

REV: v23

Date: 8/9/2013 8:00:18 AM

Sheet: 1/1