THIS DRAWING IS UNPUBLISHED. RELEASED FOR PUBLICATION -,- .
© COPYRIGHT - BY TYCO ELECTRONICS CORPORATION. ALL RIGHTS RESERVED.

LOC	DIST
GP	00

REVISIONS

P	LTR	DESCRIPTION	DATE	DWN	APVD
	C	REVISED PER ECO-11-001216	08FEB2011	CJV	SLB

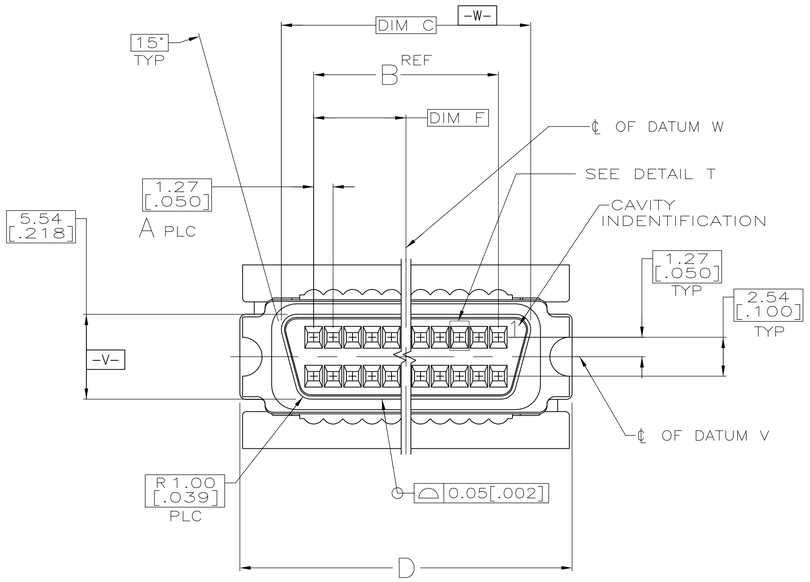

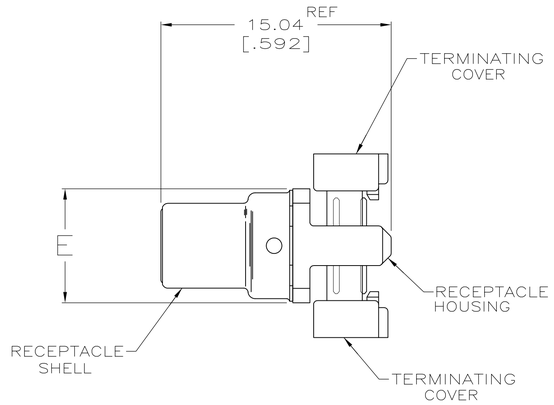

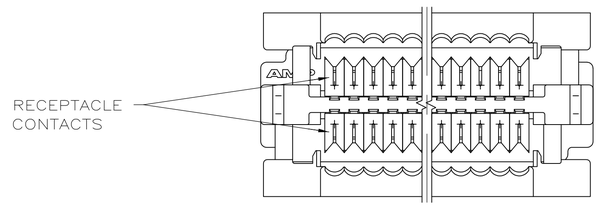

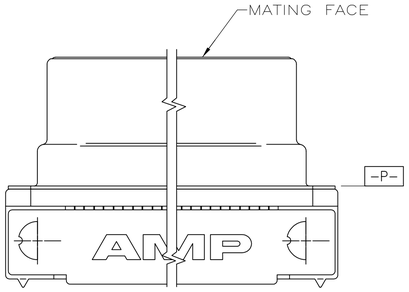

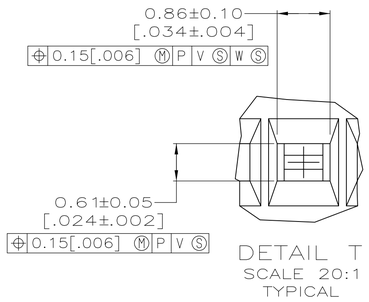

1. MATERIAL:
RECEPTACLE CONTACTS – PHOSPHOR BRONZE
RECEPTACLE SHELL – STEEL
RECEPTACLE HOUSING AND TERMINATING COVERS – UL V-O RATED THERMOPLASTIC, COLOR: BLACK.

2. PLATING:
RECEPTACLE CONTACTS – EITHER 0.76μm [.000030] MINIMUM GOLD PLATE OR GOLD FLASH OVER PALLADIUM NICKEL PLATE 0.76μm [.000030] MIN TOTAL IN CONTACT AREA, 1.27μm [.000050] MINIMUM BRIGHT TIN PLATE IN TERMINATION AREA, ALL OVER 1.27μm [.000050] MINIMUM NICKEL.
RECEPTACLE SHELL – 5.08μm [.000200] MINIMUM BRIGHT TIN PLATE OVER 1.27μm [.000050] MINIMUM COPPER.

3. RECOMMENDED WIRE: 28 AWG OR 30 AWG, SOLID OR 7 STRANDED, PVC INSULATION, WITH A 0.74–0.91 [.029–.036] INSULATION DIA.

COPYRIGHT 2005
TYCO ELECTRONICS CORP
ALL RIGHTS RESERVED

F	E	D	C	B	A	NO OF POSN	PART NO
20.96 [.825]	7.44 [.293]	51.54 [2.029]	46.13 [1.816]	41.91 [1.650]	33	68	5749210-7
15.24 [.600]	7.44 [.293]	40.11 [1.579]	34.70 [1.366]	30.48 [1.200]	24	50	5749210-5

THIS DRAWING IS A CONTROLLED DOCUMENT.

DIMENSIONS: mm [INCHES]

TOLERANCES UNLESS OTHERWISE SPECIFIED:
0 PLC ± –
1 PLC ± –
2 PLC ± –
3 PLC ± –
4 PLC ± –
ANGLES ± –

MATERIAL 1
FINISH 2

DWN G.ATTADIA – DOCK 5 02-23-05
CHK S.SHUEY 02-23-05
APVD M.WALMSLEY 02-23-05
PRODUCT SPEC 108-1228
APPLICATION SPEC 114-40029
WEIGHT –

Tyco Electronics
Tyco Electronics Corporation
Harrisburg, PA 17105-3608

NAME
RECEPTACLE ASSEMBLY,
CABLE CONNECTOR,
.050 SERIES, AMPLIMITE

SIZE	CAGE CODE	DRAWING NO	RESTRICTED TO
A1	00779	C-5749210	–

CUSTOMER DRAWING | SCALE 5:1 | SHEET 1 OF 1 | REV C

AMP 4805 REV 31MAR2000