Datasheet

Electronic Circuit Protection
ESX10-TC 12VDC

Zone 2

Electronic circuit protection type ESX10-TC is designed to ensure selective disconnection of 12VDC load systems.

12VDC power supplies, which are widely used in industry today, will shut down the output in the event of an overload with the result that one faulty load in the system can lead to complete disconnection of all loads.

Through selective disconnection the ESX10-TC responds much faster to overload or short circuit conditions than the switch-mode power supply. This is achieved by active current limitation. The ESX10-TC limits the highest possible current to 1.3 to 1.8 times the selected rated current of the circuit protector. Thus it is possible to switch on capacitive loads of up to 20,000 µF, but they are disconnected only in the event of an overload or short circuit.

For optimal alignment with the characteristics of the application the current rating of the ESX10-TC can be selected in fixed values from 1.0 A...10 A. Failure and status indication are provided by a multicolor LED and an integral short-circuit-proof status output or a relay signal contact. Remote operation is possible by means of a remote reset signal or a remote ON/OFF control signal. The manual ON/OFF button allows separate actuation of individual load circuits.

The ESX10-TC, with a width of only 12.5 mm, can be snapped onto symmetrical rails for easy installation and control cabinet space savings.

Upon detection of overload or short circuit in the load circuit, the MOSFET of the load output will be blocked to interrupt the current flow. The load circuit can be re-activated via the remote electronic reset input, control input ormanually bymeans of the ON/OFF button.

Features

- Selective load protection, electronic trip characteristics
- Active current limitation for safe connection of capacitive loads up to 20,000 µF and on overload/short circuit
- Current ratings 1 A...10 A at 12VDC
- Reliable overload disconnection with 1.1 x I_n plus, even with long load lines or small cable cross sections (see table 3)
- Manual ON/OFF button (S1)
- Control input IN+ for remote ON/OFF signal (option)
- Electronic **reset** input RE (option)
- Clear status and failure indication through LED, status output SF
- Integral fail-safe element adjusted to current rating
- Width per unit only 12.5 mm
- Rail mounting
- Ease of wiring through busbar LINE+ and 0 V
- Hazardous area approved– Class1 Div 2, Zone 2 (ATEX)

Canada
Weidmuller, Canada
10 Spy Court
Markham, Ontario L3R 5H6
Telephone: (800) 268-4080
Facsimile: (905) 475-2798
Email: info1@weidmuller.ca
Website: www.weidmuller.ca

Mexico
Weidmuller, Mexico
Blvd. Hermanos Serdán 698
Col. San Rafael Oriente
Puebla, Puebla, Mexico
C.P. 72029
Telephone: 01 222 2686267
Facsimile: 01 222 2686219
Email: clientes@weidmuller.com.mx
Website: www.weidmuller.com.mx

United States
Weidmuller
821 Southlake Blvd.
Richmond, Virginia 23236
Telephone: (800) 849-9343
Facsimile: (804) 379-2593
Email: info@weidmuller.com
Website: www.weidmuller.com

Weidmüller

Technical data ($T_{ambient}$ = 25°C, operating voltage U_S = 12VDC)

Operating data	
Operating voltage U_b	12VDC (9...18 V)
Current rating I_n	fixed current ratings: 1 A, 2 A, 3 A, 4 A, 6 A, 10 A
Closed current I_0	ON condition: typically 20...30 mA depending on signal output
Status indication by means of	• **multicolor LED:** GREEN: unit is ON, power-MOSFET is switched on - status output SF ON, supplies + 12VDC ORANGE: in the event of overload or short circuit until electronic disconnection RED: - unit electronically disconnected - load circuit/Power-MOSFET OFF - low voltage (< 3.25 V) - after switch-on till the end of switch-on delay OFF: - manually switched off (S1 = OFF) or device is dead - undervoltage • status output SF (option) • ON/OFF/ condition of switch S1
Load circuit	
Load output	Power-MOSFET switching output (high side switch)
Overload disconnection	typically 1.1 x I_n (1.05...1.35 x I_n)
Short-circuit current I_K	active current limitation (see table 1)
Trip time for electronic disconnection	see time/current characteristics typically 3 s at I_{Load} > 1.1 x I_n typically 3 s...50 ms at I_{Load} > 1.8 x I_n (or 1.5 x I_n/1.3 x I_n)
Temperature disconnection	internal temperature monitoring with electronic disconnection
Low voltage monitoring load output	with hysteresis at voltage dips < 500 ms, no reset required: load "OFF" at U_B < 3.2 V
Starting delay t_{start}	typically 10 ms
Disconnection of load circuit	electronic disconnection
Free-wheeling circuit	external free-wheeling diode recommended with inductive load
Several load outputs must not be connected in parallel	

Technical data ($T_{ambient}$ = 25°C, operating voltage U_S = 12VDC)

Status output SF	**ESX10-TC-114/-124/**
Electrical data	plus-switching signal output, connects U_S to terminal 12 of module 17plus nominal data: 12VDC / max. 0.2 A (short circuit proof) status output is internally connected to GND with a 10 kΩ resistor
Status OUT	ESX10-TC-114/-124 (signal status OUT), +12 V = S1 is ON, load output connected through 0V = S1 is ON, load output blocked and/or switch S1 is OFF red LED lit
OFF condition	0 V level at status output when: • switch S1 is in ON position, but device is still in switch-on delay • switch S1 is OFF, or control signal OFF, device is switched off • no operating voltage U_S
Reset input RE	**ESX10-TC-124**
Electrical data	voltage: max. +32VDC high > 4.5VDC ≤ 18VDC low ≤ 2.5VDC > 0 V power consumption typically 1.4 mA (+12VDC) min. pulse duration typically 10 ms
Reset signal RE (terminal 22)	The electronically blocked ESX10-TC-124 may remotely be reset via an external momentary switch due to the falling edge of a +12 V pulse. A common reset signal can be applied to several devices simultaneously. Switched on devices remain unaffected.
Control input IN+	**ESX10-TC-114**
Electrical data	see reset input RE
Control signal IN+ (terminal 21)	+12V level (HIGH): device will be switched on by a remote ON/OFF signal 0 V level (LOW): device will be switched off by a remote ON/OFF signal
Switch S1 ON/OFF	unit can only be switched on with S1 if a HIGH level is applied to IN+

Technical data (Tambient = 25°C, operating voltage U_S = 12VDC)

General data		
Fail-safe element:	backup fuse for ESX10-T not required because of the integral redundant fail-safe element	
Terminals	**LINE+ / LOAD+ / 0V**	
screw terminals		M4
max. cable cross section		
flexible with wire end ferrule w/wo plastic sleeve		20-6 AWG (0.5 - 10 mm²)
multi-lead connection (2 identical cables)		
rigid/flexible		20-11 AWG (0.5 - 4 mm²)
flexible with wire end ferrule without plastic sleeve		20-13 AWG (0.5 - 2.5 mm²)
flexible with TWIN wire end ferrule with plastic sleeve		20-9 AWG (0.5 - 6 mm²)
wire stripping length		10 mm
tightening torque (EN 60934)		1.2 Nm
Terminals	**aux. contacts**	
screw terminals M3		
max. cable cross section		
flexible with wire end ferrule w/wo plastic sleeve		23-13 AWG (0.25 – 2.5 mm2)
wire stripping length		8 mm
tightening torque (EN 60934)		0.5 Nm
Housing material	moulded	

Mounting	symmetrical rail to EN 50022-35x7.5
Ambient temperature	-20...+60 °C (without condensation, see EN 60204-1) (with condensation upon request)
Storage temperature	-20...+70 °C
Humidity	96 hrs/95 % RH/40 °C to IEC 60068-2-78-Cab climate class 3K3 to EN 60721
Vibration	3 g, test to IEC 68-2-6 test Fc
Degree of protection	housing: IP20 DIN 40050 terminals: IP20 DIN 40050
EMC (EMC directive, CE logo)	emission: EN 61000-6-3 susceptibility: EN 61000-6-2
Insulation co-ordination (IEC 60934)	0.5 kV/2 pollution degree 2 re-inforced insulation in operating area
dielectric strength	max. 18VDC (load circuit)
Insulation resistance (OFF condition)	n/a, only electronic disconnection
Dimensions (W x H x D)	12.5 x 80 x 83 mm
Mass	approx. 65 g

Table 1: voltage drop, current limitation, max. load current

current rating I_n	typically voltage drop U_{on} at I_n	active current limitation (typically)	max. load current at 100% ON duty T_u = 40 °C	T_u = 50 °C
1 A	80 mV	1.8 x I_n	1 A	1 A
2 A	130 mV	1.8 x I_n	2 A	2 A
3 A	80 mV	1.8 x I_n	3 A	3 A
4 A	100 mV	1.8 x I_n	4 A	4 A
6 A	130 mV	1.8 x I_n	6 A	5 A
10 A	150 mV	1.5 x I_n	10 A	9 A

Attention: when mounted side-by-side without convection the ESX10-TC should not carry more than 80% of its rated load with 100% ON duty due to thermal effects.

Please note:

- The user should ensure that the cable cross sections of the relevant load circuit are suitable for the current rating of the ESX10-TC used.
- Automatic start-up of machinery after shut down must be prevented (Machinery Directive 98/37/EG and EN 60204-1). In the event of a short circuit or overload the load circuit will be disconnected electronically by the ESX10-TC.
- Refer to UL file for proper wiring and installation techniques.

Table 2: ESX10-TC - Ordering Information

Version	Signal input		Signal output
	Control input ON/OFF Reset	Remote Reset	Status OUT Positive 12V = OK
ESX10-TC-114	x		x
ESX10-TC-124		x	x

ESX10-TC-114*

Current Rating (amps)	Control Input Part Number
1	**6720005351**
2	**6720005352**
3	**6720005353**
4	**6720005354**
6	**6720005356**
10	**6720005357**

ESX10-TC-124**

Current Rating (amps)	Reset Input Part Number
1	**6720005331**
2	**6720005471**
3	**6720005333**
4	**6720005334**
6	**6720005472**
10	**6720005473**

* Control force input on/off

** Reset input only to reset under fault conditions

Table 3: Specifications

Protection	to EN6052 housing IP30, terminals IP00
EMC	emitted interference to EN 61000-6-3 noise immunity to EN 61000-6-2
Insulation co-ordination	0.5 kV / pollution degree 2, re-inforced insulation in operating area to IEC60934 / IEC60664
CE logo	to 2004/108/EG and 94/9/EG
UL	UL2367, File No E306740 UL508, File No E322549 UL 1604, File No E320024
ATEX	IEC/EN60079-0 /-14/-15 Ex II 3G Ex nA II B T4 Gc X

ESX10-TC Signal inputs / outputs (wiring diagram)

ESX10-TC-114
with control input IN+
(+12VDC)
with status output SF
(+12 V = load output ON)

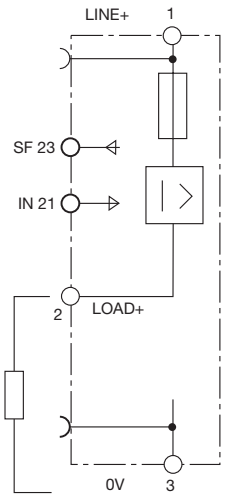

operating condition: SF +12 V = OK
fault condition: SF 0 V

ESX10-TC-124
with reset input RE
(+12VDC ↓)
with status output SF
(+12 V = load output ON)

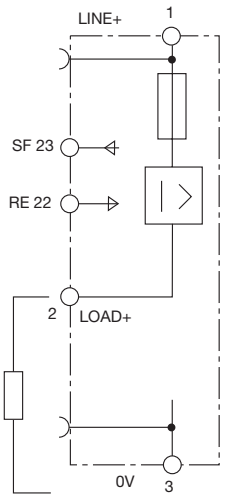

operating condition: SF +12 V = OK
fault condition: SF 0 V

Schematic diagram
(Example)

ESX10-TC-124-…

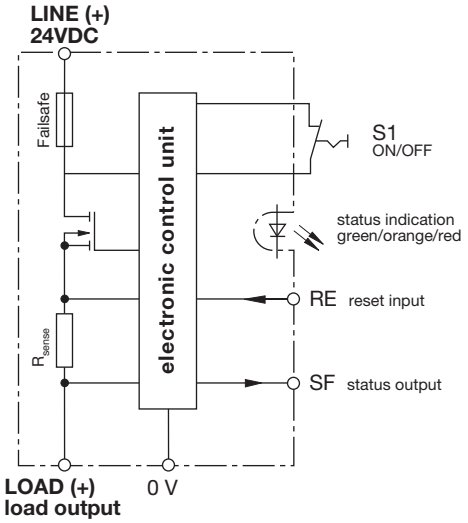

Terminal wiring diagram
(Example)

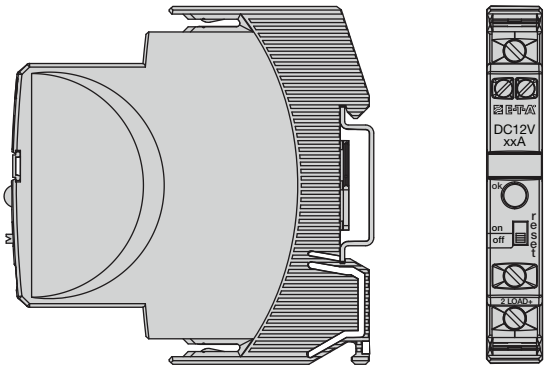

Dimensions

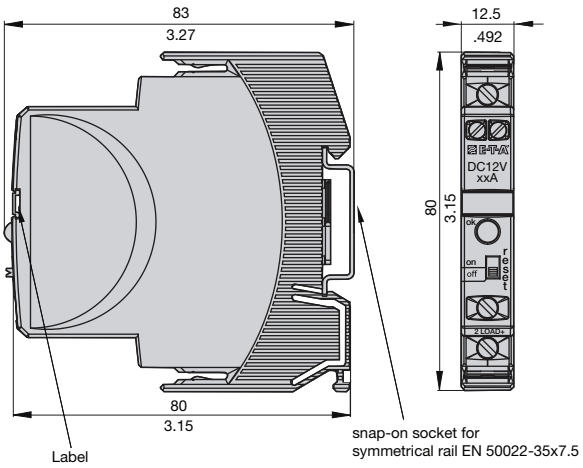

Time/Current characteristic curve (T_a = 25 °C)

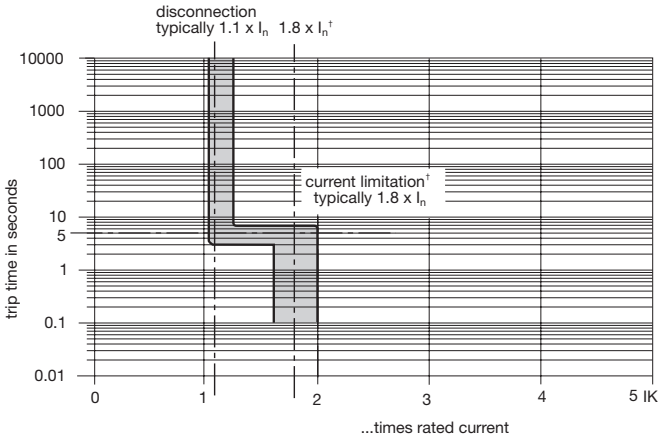

† current limitation typically 1.8 x I_n times rated current at I_n = 1.0 A...6 A
current limitation typically 1.5 x I_n times rated current at I_n = 10 A

- The trip time is typically 3 seconds in the range between 1.1 and 1.8 x I_n†.
- Electronic current limitation occurs at typically 1.8 x I_n† which means that under all overload conditions (independent of the power supply and the resistance of the load circuit) the max. overload before disconnection will not exceed 1.8 x I_n† times the current rating. Trip time is between 100 ms and 3 sec (depending on overload or at short circuit).
- Without this current limitation a considerably higher overload current would flow in the event of an overload or short circuit.

Accessories for ESX10-TC

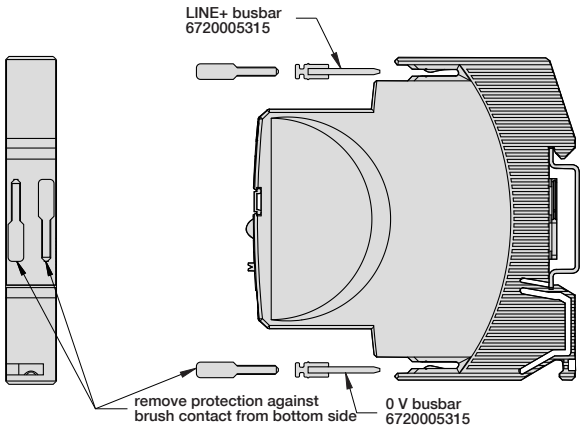

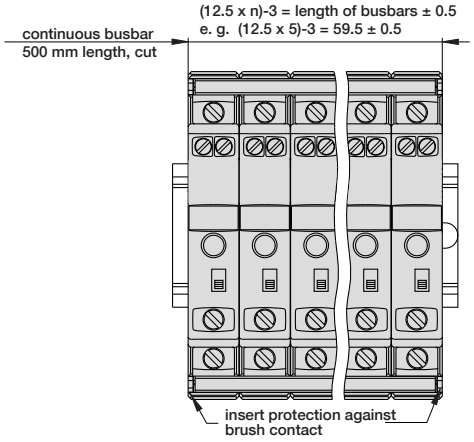

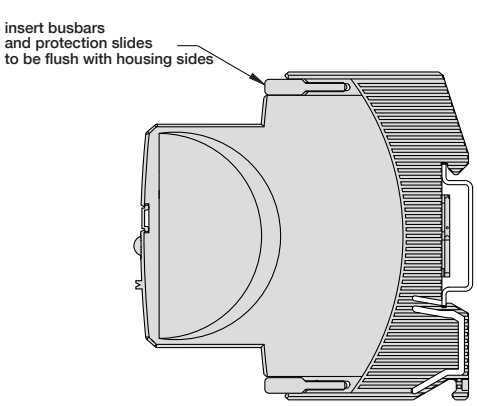

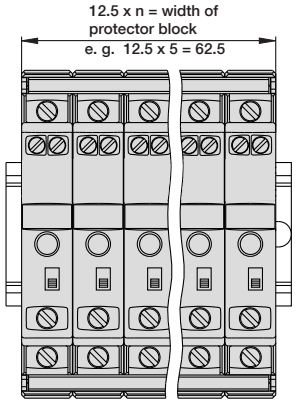

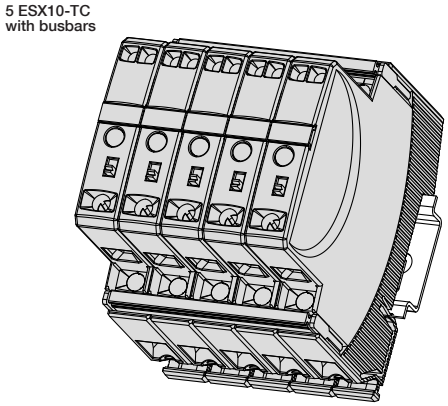

Mounting procedure:

Before wiring, insert busbars into protection block.
Max. 10 insertion/removal cycles for busbars.

Recommendation:

Every 10 units busbars should be interrupted and fed in anew.

Table of lengths for busbars:

(see accessories)

No. of Units	2	3	4	5	6	7	8	9	10
Length of busbar [mm] + 0.5 mm	22	34.5	47	59.5	72	84.5	97	10.95	122

Accessories for ESX10-TC

Description

The ESX10-TC features an integral power distribution system. The following wiring modes are possible with various pluggable current and signal busbars:

- LINE +(12VDC)
- 0 V

Caution: The electronic devices ESX10-TC require a 0 V connection

Description	Part No.	
Busbars for LINE+ and 0 V	**6720005315**	
max. load with one line entry (recommended: center line entry)	I_{max}	50 A
max. load with two line entries	I_{max}	63 A
length:	500 mm	

TS32 rail adapter	**9102100000**

(Remove protection walls/barriers before using adapter.)

For detailed installation instructions and approvals contact Weidmuller at 1-800-849-9343 or go to www.weidmuller.com

Accessories

Busbars for LINE+ and 0 V
max. load with one line entry
(recommended: centre line entry)
max. load with two line entries
grey insulation, length: 500 mm
6720005315

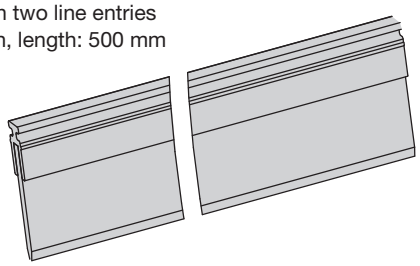

Busbars for LINE+ and 0 V
grey insulation
max. number of plug-on operations 10:

6720005335, (3-unit-block ESX10-T), length: 34.5 mm
6720005336, (4-unit-block ESX10-T), length: 47 mm
6720005337, (5-unit-block ESX10-T), length: 59.5 mm
packing unit: 10 pcs

6720005474, (8-unit-block ESX10-T), length: 97 mm
6720005475, (10-unit-block ESX10-T), length: 122 mm
packing unit: 4 pcs

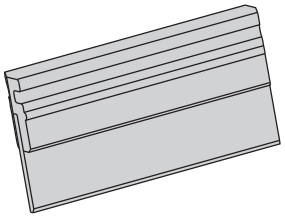

Connector bus link –K10
suitable for auxiliary contacts (series connection)
6720005476 (1.5 mm2, brown),

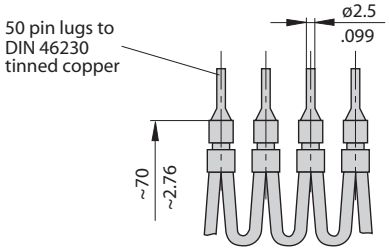

Supply module for LINE+ and 0 V
suitable for ESX10-T... versions
ampacity Imax 50 A I_{max} 50A
AD-TX-EM01