THIS COPY IS PROVIDED ON A RESTRICTED BASIS AND IS NOT TO BE USED IN ANY WAY DETRIMENTAL TO THE INTERESTS OF PANDUIT CORP.

NOTES:
1. VISIT OUR ON-LINE CATALOG AT WWW.PANDUIT.COM FOR A LIST OF CURRENT PARTS APPLICABLE FOR USE WITH THIS PRODUCT.
2. DIMENSIONS IN [ ] ARE METRIC.
3. WEIGHT: 1.40 LB/10 PCS [635.3 g/10 PCS]
4. PART INCLUDES:
   1- WALL PLATE
   1- CATEGORY 6 PUNCHDOWN MODULE
   2- MOUNTING SCREWS
5. RoHS COMPLIANT

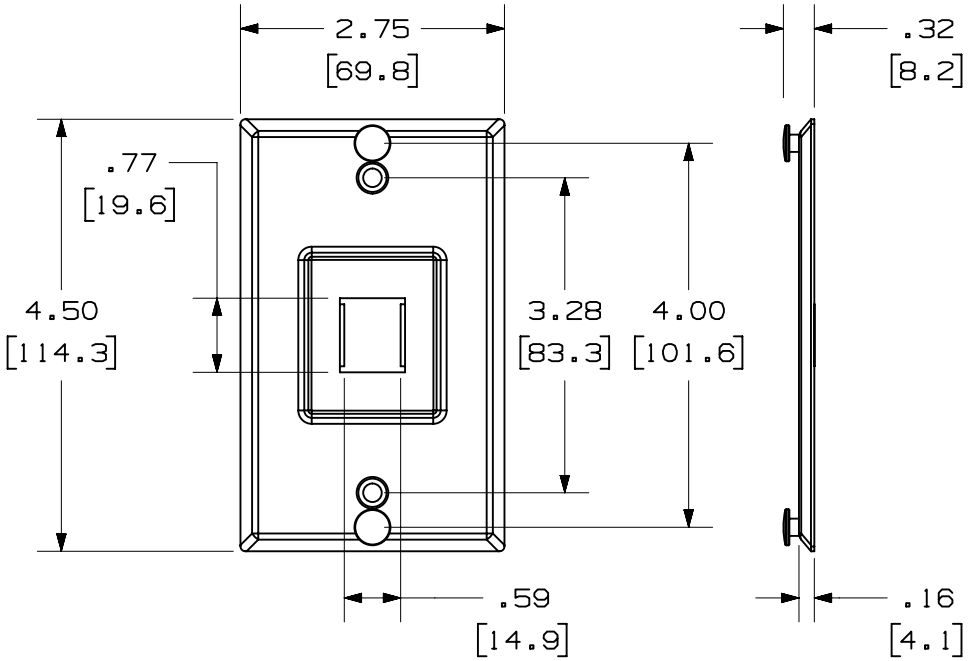

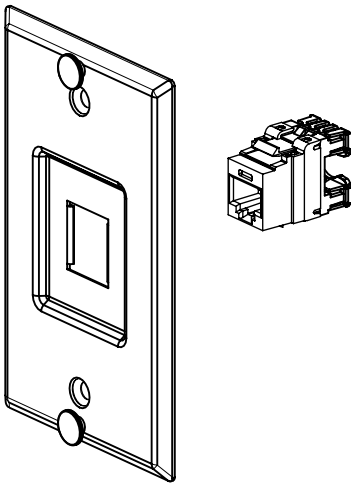

00A	06-14-22	MDJR	JCO	REFR	RELEASED TO PRODUCTION	02699NCB
REV	DATE	BY	CHK	APR	DESCRIPTION	ECN

PART NUMBER: KWPK6

TITLE: CATEGORY 6 STAINLESS STEEL WALL PHONE PLATE KIT

CUSTOMER DRAWING

ITEM REVISION NAME: 02699NCB/00

DATASET FILE NAME: 02699NCB_DC/00A

THIRD ANGLE PROJECTION

MATERIAL: 20 AWG 430 S.S.

DRAWING NUMBER: 02699NCB-DC

DRAWN BY	DATE	CHK	SCALE	SHEET 1 OF 1	SIZE
MDJR	06-14-22	JCO	NONE		A

A-SIZE CUSTOMER