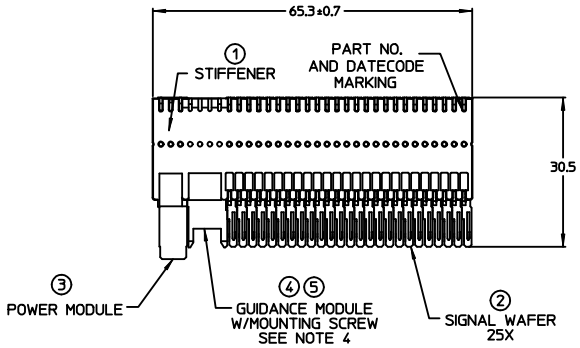

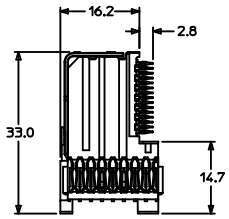

NOTES:

1. MATERIALS: HOUSING : LIQUID CRYSTAL POLYMER (LCP) GLASS-FILLED, UL94V-0, BLACK. TERMINALS: COPPER ALLOY STIFFENER: STAINLESS STEEL
2. FINISH: SELECTIVE GOLD (Au) 0.76 micrometer MINIMUM IN CONTACT AREA, SELECTIVE MATTE TIN (Sn) IN TAIL AREA, NICKEL (Ni) UNDERPLATE OVERALL.
3. REFER TO MOLEX PRODUCT SPECIFICATION PS-74031-999 FOR PERFORMANCE SPECIFICATIONS.
4. PARTS TO BE PACKAGED PER PK-70873-5041. SCREWS PACKED IN BAG INSIDE TUBE.
5. THIS PART CONFORMS TO CLASS "B" REQUIREMENTS OF MOLEX COSMETIC SPECIFICATION PS-45499-002.
6. REFER TO MOLEX DOCUMENT SD-74041-002 FOR ADDITIONAL DETAIL ON THE SIGNAL WAFER.
7. REFER TO MOLEX DOCUMENT SD-74037-006 FOR ADDITIONAL DETAIL ON THE GUIDANCE MODULE.
8. REFER TO MOLEX DOCUMENT SD-75885-002 FOR ADDITIONAL DETAIL ON THE LEAD-FREE POWER MODULE.
9. LABEL MARKED WITH MOLEX PART NUMBER AND DATE CODE. LABEL MAY BE REPLACED WITH LASER MARKING ON THE STIFFENER.

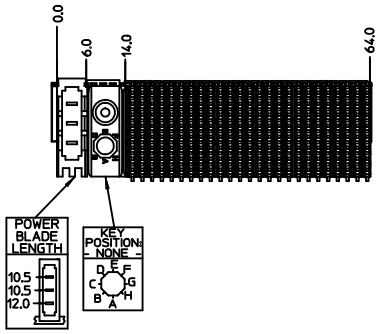

LEAD-FREE PLATING ON SIGNALS, SHIELDS, AND POWERS

ITEM	PART NUMBER	PART DESCRIPTION	QTY
1	74046-0065	STIFFENER	1
2	74041-1001	SIGNAL WAFER, LF	25
3	75885-8433	POWER MODULE, LF	1
4	74037-0008	POLARIZING / GUIDE MODULE	1
5	73726-0000	GUIDE MODULE MNTG SCREW	1

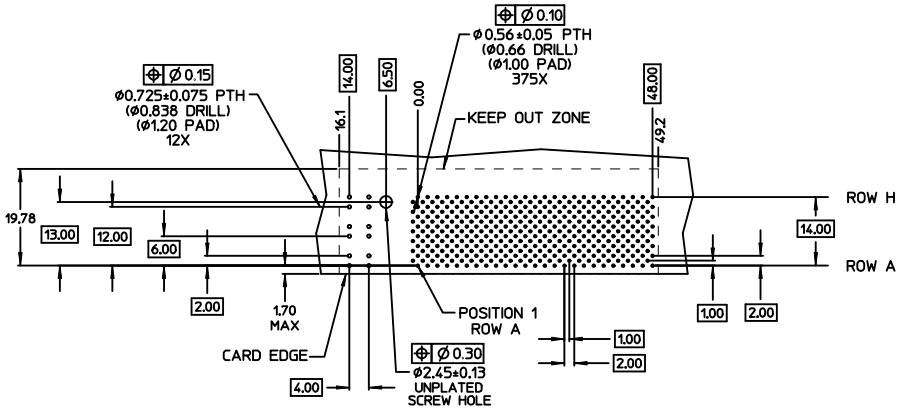

DAUGHTERCARD HOLE PATTERN (CONNECTOR SIDE)

CUSTOMER: ECI

CHG TO LEAD-FREE
EC NO: UCP2011-3282 2011/02/15
DRWN:MWOLFE 2011/02/15
CHKD:SDANNELLEY 2011/05/09
APPR:SMILLER
DESCRIPTION
REV B

QUALITY SYMBOLS: ▽=0 ▽=0 ▽=0 ▽=0

GENERAL TOLERANCES (UNLESS SPECIFIED)

	mm	INCH
4 PLACES	± ---	± ---
3 PLACES	± ---	± ---
2 PLACES	± 0.25	± ---
1 PLACE	± 0.38	± ---
ANGULAR ±---°		

DRAFT WHERE APPLICABLE MUST REMAIN WITHIN DIMENSIONS

DIMENSION STYLE: MM ONLY
SCALE: 1:1
DESIGN UNITS: METRIC
THIRD ANGLE PROJECTION

		DATE
DRAWN BY	VARVARA	04/07/07
CHECKED BY	SREED	04/07/07
APPROVED BY	SMILLER	2011/05/09

TITLE: 8 ROW VHDM, LF DAUGHTERCARD SALES DRAWING

MOLEX INCORPORATED

MATERIAL NO. 74040-1048
DOCUMENT NO. SD-74040-1048
SHEET NO. 1 OF 1
SIZE D

THIS DRAWING CONTAINS INFORMATION THAT IS PROPRIETARY TO MOLEX INCORPORATED AND SHOULD NOT BE USED WITHOUT WRITTEN PERMISSION