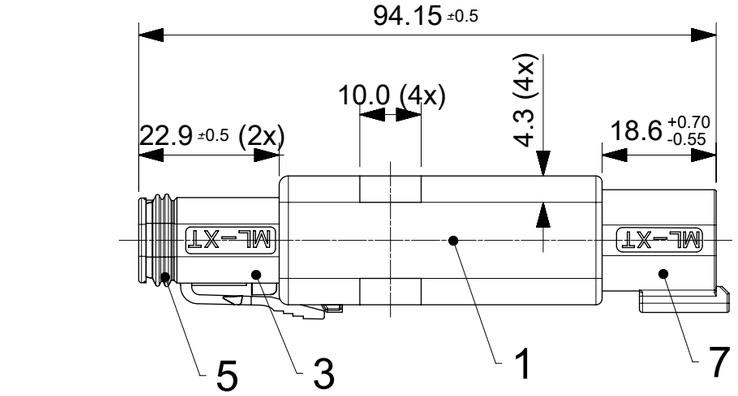

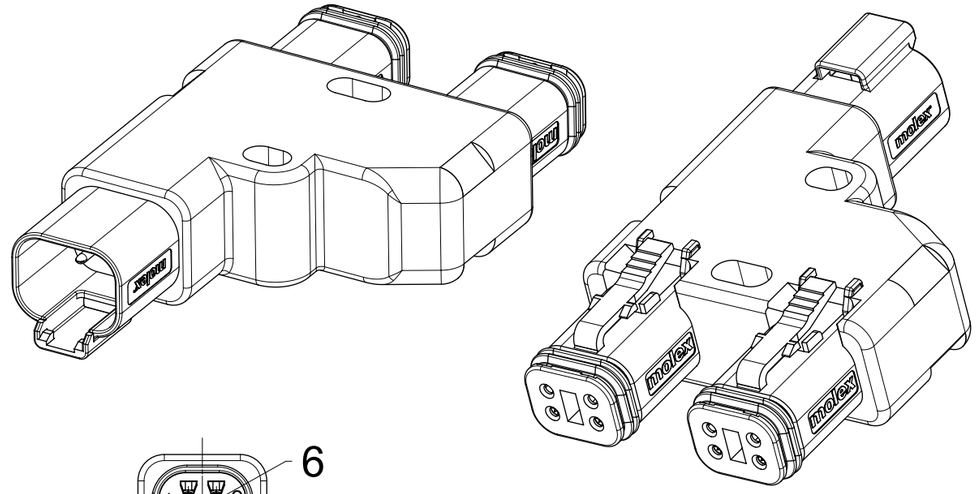

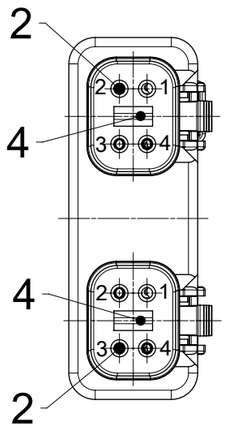

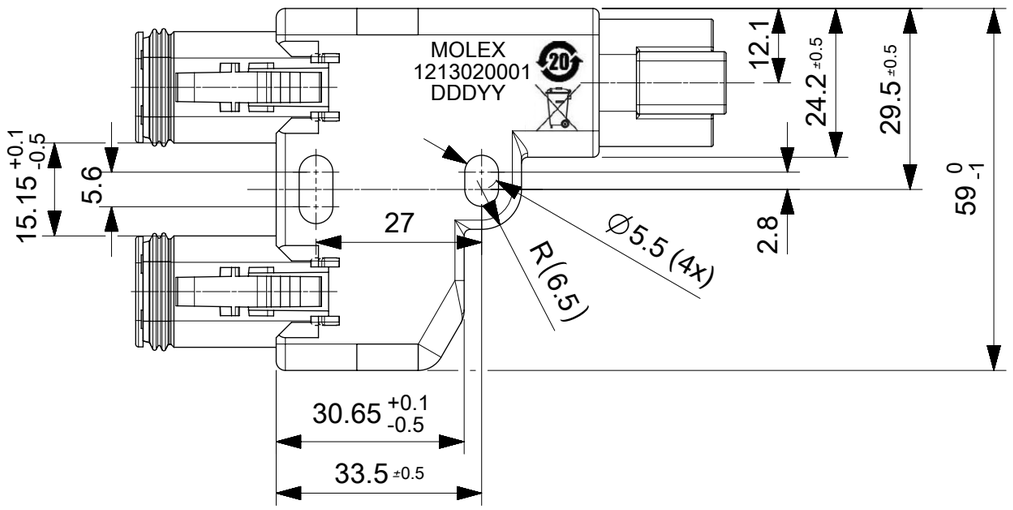

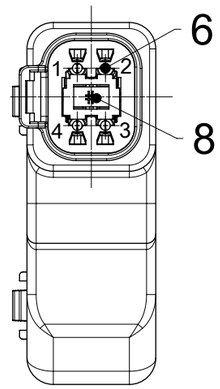

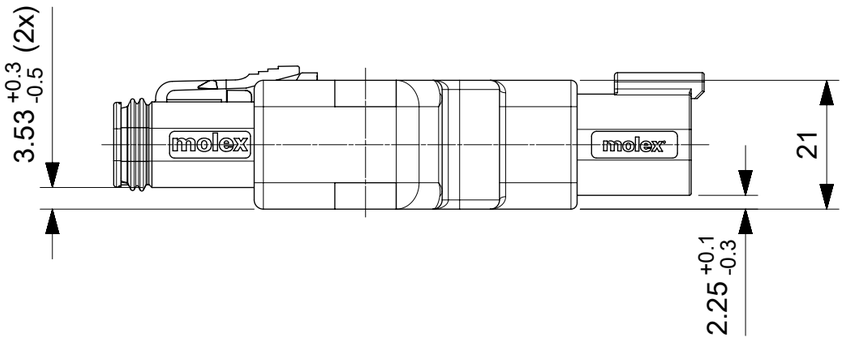

NOTES:

1. ELECTRICAL DATA:
   MAX. CURRENT: 13A
   MAX. VOLTAGE: 200V
2. PROTECTION RATING: IP68 / IP69k
3. OPERATING TEMPERATURE: -40°C TO 85°C
4. PART PRINTED WITH LASER PRINTING.
   CONTENT: SEE DRAWING
5. PACKAGING: ACC. THE PK-DWG 1213020002PDDK00 PARTS ORDERED AND IN LAYERS, PROTECTED WITH HARD FOAM AND CARTON LAYERS, INSIDE MOLEX STANDARD CARTON BOXES
6. PART ACC. TO SPECIFICATION NO. 1213020001 PS P10
7. PART TO BE TESTED FOR CONTINUITY, OPEN AND SHORT CIRCUITS AND LEAKAGE
8. MAX. TORQUE FOR THE M5 SCREWS 3Nm

WIRING DIAGRAM

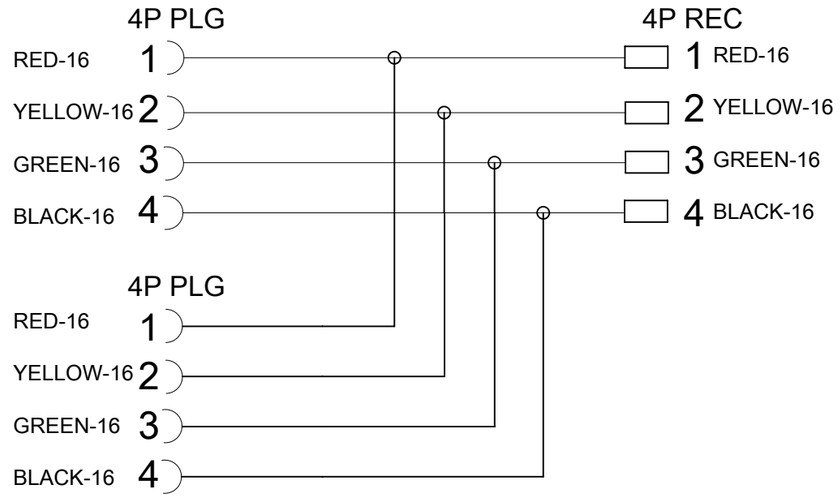

ITEM	QTY.	DESCRIPTION	MATERIAL	FINISH/COLOR
8	1	WEDGELOCK NO KEY	NYLON 30% GF	GN
7	1	HOUSING	NYLON 30% GF	BK
6	4	CONTACT TERMINAL MA	COPPER ALLOY	Au OVER Ni
5	2	SEAL	SILICONE RUBBER	TRAFFIC RED
4	2	WEDGELOCK NO KEY	NYLON 30% GF	GN
3	2	HOUSING	NYLON 30% GF	BK
2	8	CONTACT SOCKET TERMINAL FE	COPPER ALLOY	Au OVER Ni
1	1	OVERMOLD SPL Y	PA 30% GF / PUR	BK

DOCUMENT STATUS: P1 | RELEASE DATE: 2019/12/05 09:01:16

THIS DRAWING CONTAINS INFORMATION THAT IS PROPRIETARY TO MOLEX ELECTRONIC TECHNOLOGIES, LLC AND SHOULD NOT BE USED WITHOUT WRITTEN PERMISSION

SYMBOLS: E A = 0; E C = 0; E P = 0; S = 0; ▼ = 0; C = 0; ☒ = 0; ■ = 0; V = 0

DIMENSION UNITS: mm | SCALE: 1:1

GENERAL TOLERANCES (UNLESS SPECIFIED)

ANGULAR TOL	±	1.0 °
4 PLACES	±	
3 PLACES	±	
2 PLACES	±	0.05
1 PLACE	±	0.3
0 PLACES	±	0.5

DRAFT WHERE APPLICABLE MUST REMAIN WITHIN DIMENSIONS

CURRENT REV DESC:

EC NO: 628527
DRWN: NFRITZEN 2019/12/02
CHK'D: RSILLER 2019/12/05
APPR: RSILLER 2019/12/05

INITIAL REVISION:
DRWN: RSCHIEBER 2017/01/30
APPR: RSILLER 2017/02/02

THIRD ANGLE PROJECTION | DRAWING: A3-SIZE | SERIES: 121302

molex

SPL Y MLXT 4P REC-2XPLG STR PA/PUR
UNSH BK AU

PRODUCT CUSTOMER DRAWING

DOCUMENT NUMBER	DOC TYPE	DOC PART	REVISION
1213020001	PSD	000	B1

MATERIAL NUMBER	CUSTOMER	SHEET NUMBER
1213020001		1 OF 1

FORMAT: master_dwg-A3
REVISION: H
DATE: 2018/01/18