PART NUMBER	AMPS	VOLTS	FUSE SUB-ASSEMBLY	CATALOG NUMBER	DESCRIPTION	UPC CODE	CE LOGO	CSA LOGO	I.R. REQ'D	UL LISTED 717H FUSE LOGO	RoHS LOGO	Pb-FREE LOGO
0375012.HXP	12	125	375012-P	375012P	FUSE 125V SB PT 3AG Pb-FREE 12A	079458 10025	YES	YES	10,000A 125V AC	YES	YES	YES
0375015.HXP	15	125	375015-P	375015P	FUSE 125V SB PT 3AG Pb-FREE 15A	079458 10027	YES	YES	10,000A 125V AC	YES	YES	YES

LTR	DATE	REVISION	CHK	APD
A	03/10/05	61695 - RELEASED PJM		
B	11/30/05	84645B-CHG 32.39 TO 32.72 PJM		

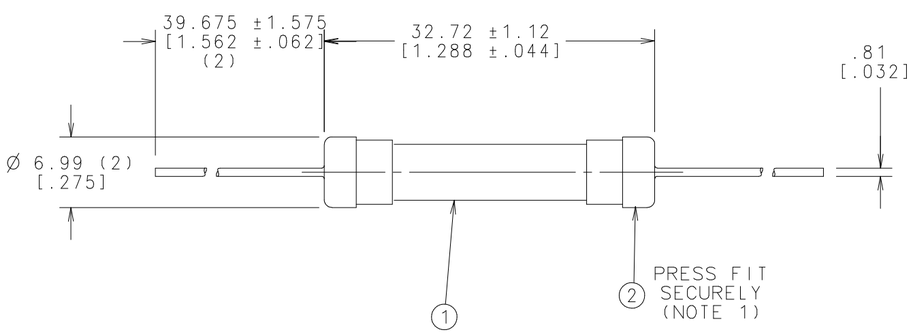

NOTES:

1. OUTER CAP & LEAD ASSEMBLY SHALL WITHSTAND A PULL TEST OF 10 POUNDS WITHOUT SEPARATING FROM FUSE CAP.
2. MEASURE VOLTAGE DROP AND COLD RESISTANCE PER ES-001038.
3. PACK 100 FUSES IN BOX 896-180 AND LABEL.
4. LABEL TO BE APPLIED TO THE END OF THE BOX WITH BAR CODE PORTION WRAPPED AROUND THE SIDE.

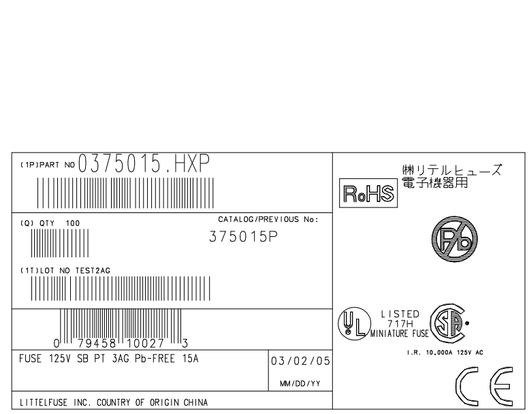

NOTE: LABEL ILLUSTRATION(S) IS FOR REFERENCE ONLY. THE ACTUAL COPY AND REGULATORY MARKINGS WILL VARY BY THE INDIVIDUAL PART NUMBER SEE CHART.

NO	COMPONENT NO	DESCRIPTION	QTY/M	U/M
3	896-180	CARTON	10	EA
2	934-054	CAP AND LEAD ASSEMBLY	2000	EA
1	SEE CHART	FUSE SUB-ASSEMBLY	1000	EA

BILL OF MATERIAL

UNLESS OTHERWISE SPECIFIED, DIMENSIONS ARE IN MILLIMETERS. DIMENSIONS IN BRACKETS [ ] ARE INCHES

UNLESS OTHERWISE SPECIFIED, DIMENSIONS DO NOT INCLUDE PLATING.

O	DENOTES CRITICAL CHARACTERISTICS.
CPK	DENOTES CPK DIMENSIONS,-MINIMUM CPK VALUE
ST	DENOTES A CHARACTERISTIC THAT PROVIDES AN INDICATION OF PROCESS PERFORMANCE. PROCEDURE FOR MEASUREMENT AND TRACKING TO BE DEFINED IN LITTELFUSE INSPECTION INSTRUCTIONS.
CP	DENOTES CP DIMENSIONS,-MINIMUM CP VALUE MUST BE WITHIN THE DIMENSIONAL LIMITATIONS SHOWN ON DRAWING AND INITIALLY LOCATED TO ALLOW FOR MAXIMUM TOOL LIFE.

COPIES TO

1	9	18
2	10	19
3	12	20
4	13	21
5	14	23
6	15	33
7	16	43
8	17	53

MATL SPEC

FINISH

DRW PJM DATE 03/10/05 SCALE 2:1

CHK DATE SUPER DR

APPD DATE FINISH GOOD WT GRAMS/PIECE

TOLERANCE UNLESS OTHERWISE SPECIFIED
TWO PLACE DEC ± .25[.01] FRACTION ±
THREE PLACE DEC ± .100[.004] ANGULAR ±1°

3RD ANGLE PROJECTION

TITLE 3AG SLO-BLO FUSE Pb-FREE 100 PACK

Littelfuse®
DES PLAINES, ILLINOIS 60016

REVISION B

DRWG. NO. 0375000.HXP

FINAL

SERIES

UNCONTROLLED DOCUMENT

CAD GENERATED DRAWING - NO PENCIL CHANGES ALLOWED