TELAIRE®

Application Note

# SM-UART-04L
# PM2.5 + PM10
# Particulate Dust Sensor


Telaire SM-UART-04L Particulate Dust Sensor is designed for a wide range of air quality applications where fine particle dust needs to be measured. Applications include air quality meters and air purifiers for both residential and light industrial monitoring and control. The optical design leverages laser technology, which allows customers to achieve excellent performance with balanced reliability. SM-UART-04L is an ideal solution for industrial and consumer applications.

SM-UART-04L is a PM2.5 laser-based Particulate Dust Sensor that detects dust particle concentration in air by using an optical sensing method. A laser light emitting diode (laser LED) and a photo sensor are optically arranged in the device. The photo sensor detects the reflected laser LED light by dust particles in air. The dust sensor can detect small particles from large house dust by the pulse pattern of the signal output.

## Features

- Laser-based optical sensing method
- High accuracy
- Fast response
- PM2.5 Output
- PM10 Calculated Output
- ROHS and REACH Compliant
- UART Series Digital Output
- Compact size
- Flexible mounting style
- Protected from EMC intrusion by metal case
- Wide detection range
- Average Time Before Recalibration: 40,000 hrs

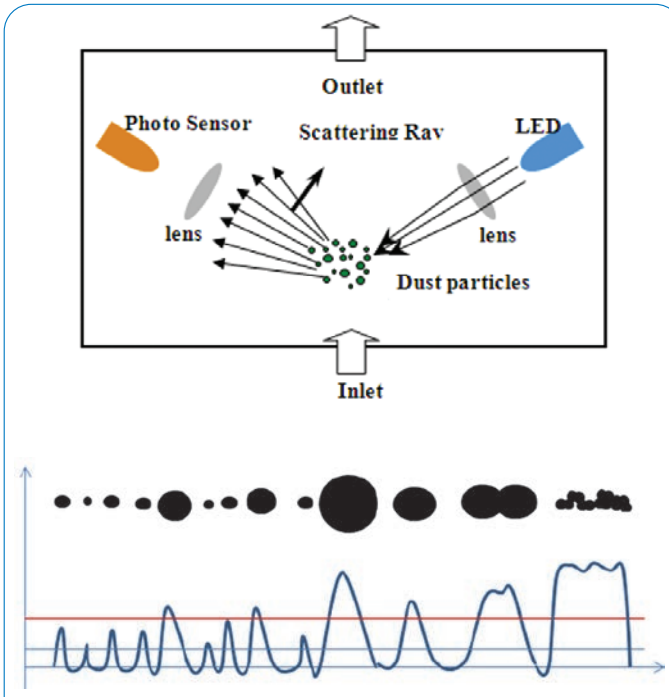


Figure 1 : Detection Principle

## Applications

- Indoor Air Quality Monitoring
- Air Cleaners and Purifiers
- Air Conditioners and HVAC
- Outdoor Dust Monitoring (with additional protection)

Amphenol
Advanced Sensors

# SM-UART-04L Particulate Dust Sensor

## Block Diagram

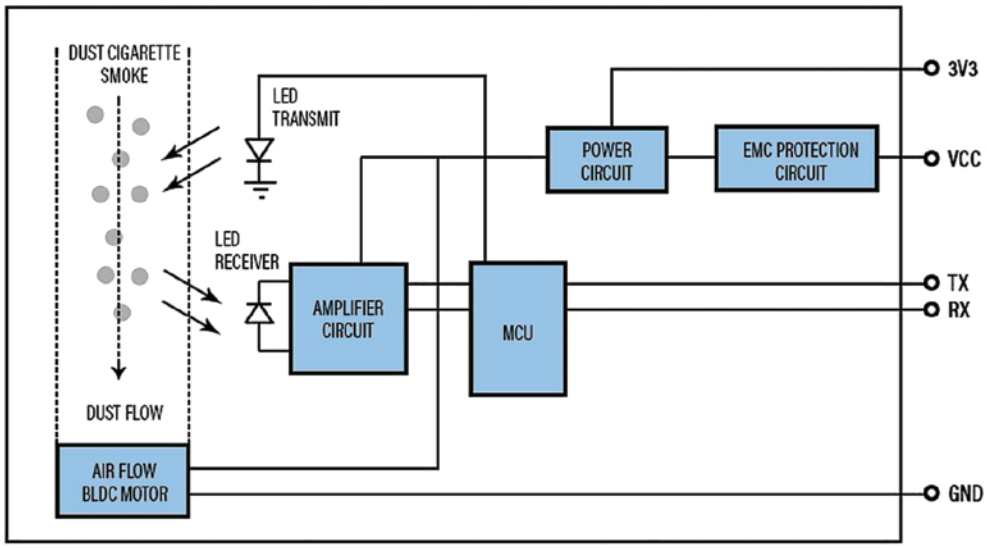


## Calibration

Calibration carried out with cigarette smoke per GB/T1880

## Absolute Maximum Ratings

| Parameter | Symbol | Rating | Unit |
|---|---|---|---|
| Supply Voltage | Vcc | 0 to + 5.5 | V |
| Operating Temperature | Topr | -10 to 50[1] | °C |
| Storage Temperature | Tstg | -30 to 70 | °C |
| Operating Humidity [1] | RHopr | 0 to 95 | % |
| Storage Humidity [1] | RHstg | 0 to 95 | % |

1) Non-condensing

## Electrical Characteristics

| Parameter | | Symbol | Min. | Typ. | Max. | Unit |
|---|---|---|---|---|---|---|
| Particle Size | | D | 0.3 | 2.5 | 10 | um |
| Detection Range | | $D_{reg}$ | 1 | — | 999 | μg/m³ |
| Resolution | | R | — | 1 | — | μg /m³ |
| Indication Error [2] | 1 ~100 ug/m³ | $D_{err}$ | — | — | +/-10 | μg /m³ |
| | 100~999 ug/m³ | | — | — | +/-10 | % |
| Warm-Up Time | | $t_{wup}$ [2] | — | 5 | — | s |
| Response Time | | $t_{rsp}$ [2] | — | 1 | — | s |
| Laser Life (Average Time Before Recalibration) | | T | — | 40,000 | — | hour |
| Supply Voltage | | $V_{CC}$ | 4.8 | 5 | 5.2 | V |
| Supply Voltage Ripple | | $V_{CC}$ Ripple | — | — | 30 | mV |
| Current Consumption | | $I_{CC}$ [2] | — | 60 | 100 | mA |
| Output (UART) | | 3.3V | | | | |

1) Non-condensing 2) Testing at T=25°C, RH=40-60%

# SM-UART-04L Particulate Dust Sensor

## Connector

Sensor Connector:
CJT A1276WVA-N-2x5P-H72

Equivalent Connector:
Harwin, Inc. M50-3000545; Amphenol FCI 20021311-00010T4LF

| Pin # | Pin Name | Description |
|---|---|---|
| 1 | 5V | Input Supply Voltage |
| 2 | 5V | Input Supply Voltage |
| 3 | GND | Ground |
| 4 | GND | Ground |
| 5 | RESET | Reset Pin @3.3V TTL, Low level reset |
| 6 | NC | — |
| 7 | RXD | UART Receiver @ 3.3V TTL |
| 8 | NC | — |
| 9 | TXD | UART Transceiver @ 3.3V TTL |
| 10 | SET/SLEEP | Working Mode Pin @ 3.3V TTL Floating or high level for normal working condition. Low level for dormancy mode. |

Note: Current approx 5mA in standby mode.

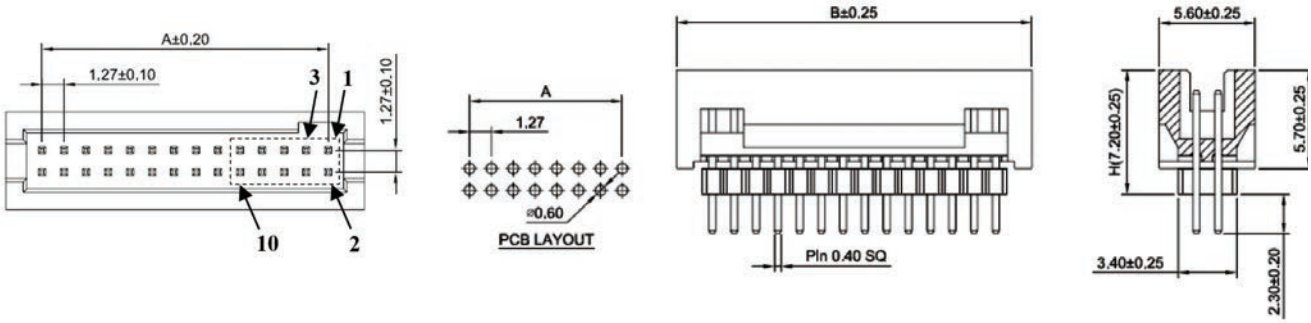


## Application Circuit

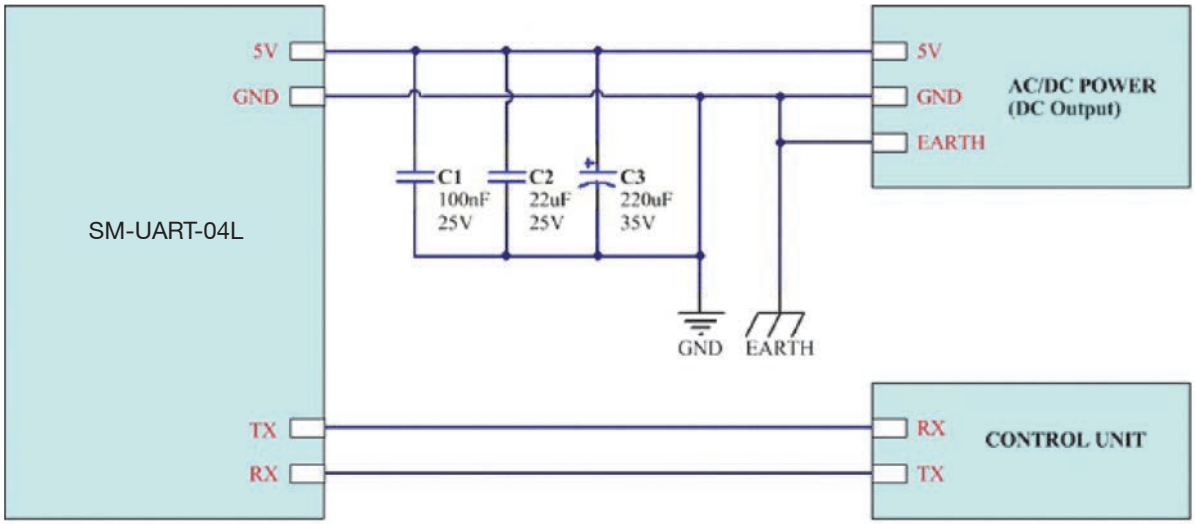

# SM-UART-04L Particulate Dust Sensor

## Communication Protocol - UART

| UART Serial Configuration | |
|---|---|
| Baud Rate | 9600 bps |
| Data Bits | 8 |
| Parity | None |
| Stop Bits | 1 |

## Communication Protocol - Default Output UART Frame Format

| | | |
|---|---|---|
| Head 1 | 0x42 | |
| Head 2 | 0x4D | |
| H_Length | ... | Length = 2 * 13 + 2 (Data+CS) |
| L_Length | ... | |
| H_D1 | ... | PM1 = H_D1 * 256 + L_D1 ug/m3 (Standard Smoke, Calculated Value |
| L_D1 | ... | |
| H_D2 | ... | PM2.5 = H_D2 * 256 + L_D2 ug/m3 (Standard Smoke, Calibrated Value) |
| L_D2 | ... | |
| H_D3 | ... | PM10 = H_D3 * 256 + L_D3 ug/m3 (Standard Smoke, Calculated Value) |
| L_D3 | ... | |
| H_D4 | ... | Reserve |
| L_D4 | ... | |
| H_D5 | ... | Reserve |
| L_D5 | ... | |
| H_D6 | ... | Reserve |
| L_D6 | ... | |
| H_D7 | ... | Reserve |
| L_D7 | ... | Reserve |
| H_D8 | ... | Reserve |
| L_D8 | ... | Reserve |
| H_D9 | ... | Reserve |
| L_D9 | ... | Reserve |
| H_D10 | ... | Reserve |
| L_D10 | ... | Reserve |
| H_D11 | ... | Reserve |
| L_D11 | ... | Reserve |
| H_D12 | ... | Reserve |
| L_D12 | ... | Reserve |
| H_D13 | ... | Reserve |
| L_D13 | ... | Error code 0b0ABCDEFG<br>A = X Reserve<br>B = X Reserve<br>C = 1 High temperature alarm<br>D = 1 Low temperature alarm<br>E = 1 Fan error<br>F = X Reserve<br>G = X Reserve |
| H_CS | ... | CS = HEAD1 + HEAD2 + … + L_D13 |
| L_CS | ... | |

* We recommend using PM values with standard smoke.

# SM-UART-04L Particulate Dust Sensor

## Response Mode - Command Frame

| Head 1 | Head 2 | CMD | D1 | D2 | CRC1 | CRC2 |
|---|---|---|---|---|---|---|
| 0x42 | 0x4D | CMD | DATAH | DATAL | LRCH | LRCL |

| CMD | DATAH | DATAL | Description | Response |
|---|---|---|---|---|
| 0xE2 | X | X | Get reading | Same format as above table |
| 0xE1 | X | 0x00 – Ask-answer mode<br>0x01 – Direct output mode | Output mode switch | 0x42 0x4D 0x00 0x04 0xE1 0x00 0x01 0x74<br>0x42 0x4D 0x00 0x04 0xE1 0x01 0x01 0x75 |
| 0xE4 | X | 0x00 – Standby mode<br>0x01 – Working mode | Standby control | 0x42 0x4D 0x00 0x04 0xE4 0x00 0x01 0x77 |

## Dimensions

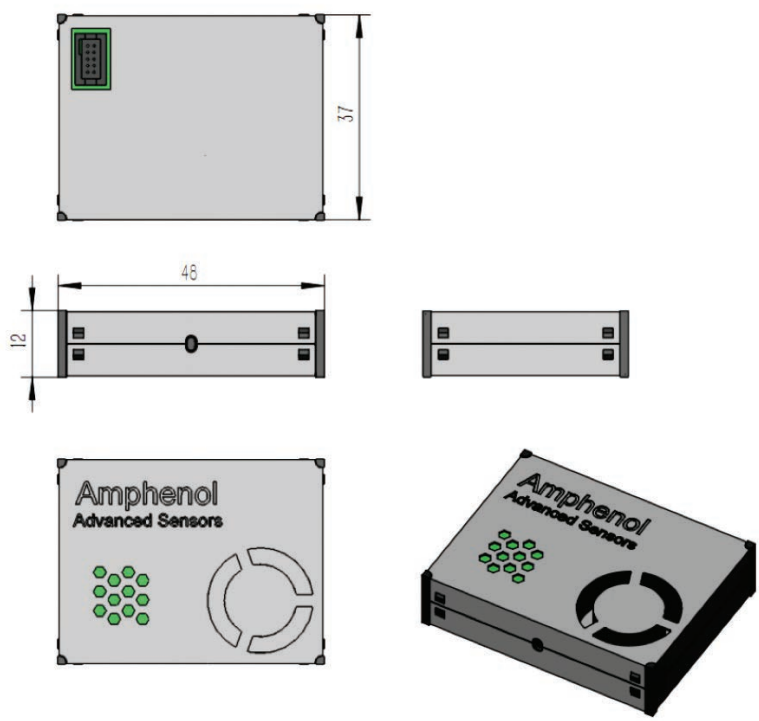

# SM-UART-04L Particulate Dust Sensor

## Reliability

| | | |
|---|---|---|
| 1 | Drop | Drop it unintentionally from 100 cm height down to the hard wooden board three times at random direction |
| 2 | High Temp. Storage | Leave in the atmosphere 70°C for 96 hours |
| 3 | Low Temp. Storage | Leave in the atmosphere -30°C for 72 hours |
| 4 | High Temp. Operation | Operate it in the atmosphere of 50°C for 96 hours |
| 5 | Low Temp. Operation | Operate it in the atmosphere of -10°C for 72 hours |
| 6 | Temperature Cycle | Repeat 30 times in the following cycle 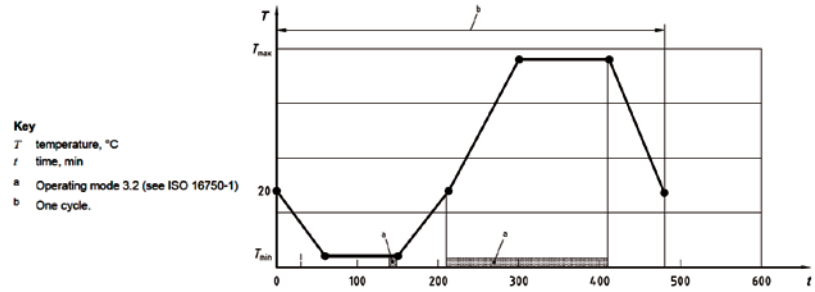  |
| 7 | Operating Volt. Range | VCC = 4.8V/5.0V/5.2V. Verify Indication Error within SPEC (0~1000μg/m³) |
| 8 | Slow Decrease & Increase of Supply Voltage | Decrease the supply voltage from the minimum supply voltage 4.8V to 0V, then increase it from 0V to 5.2V, applying a change rate in equal steps of not more than 200 mV/min.<br>Test dust concentration is 250 ± 50μg/m³ |
| 9 | Short Circuit Protection | Connect all pins to the pins next to them for a duration of 60s with power supplied and all other pins remain open. Class C satisfied |
| 10 | Reliability - Operating | TA=25°C, RH=30~70%, VCC=5V<br>Continuously operate 720h. Verify Indication Error within SPEC (0~1000μg/m³) |
| 11 | Reliability – ON/OFF | 10s ON/10s OFF, operate for 72h. Verify Indication Error within SPEC (0~1000μg/m³) |
| 12 | Salt Spray | According to GB/T 2423.17-93, spray 5% NaCl solution in salt mist box at 35°C for 24 hours, then clean with water after test |

## Characteristics Test

The sensor uses a particle counter as a reference instrument (TSI 8530 or compatible equipment). Cigarette particles were used as reference particles. Refer to Figure 2 for the output curve.

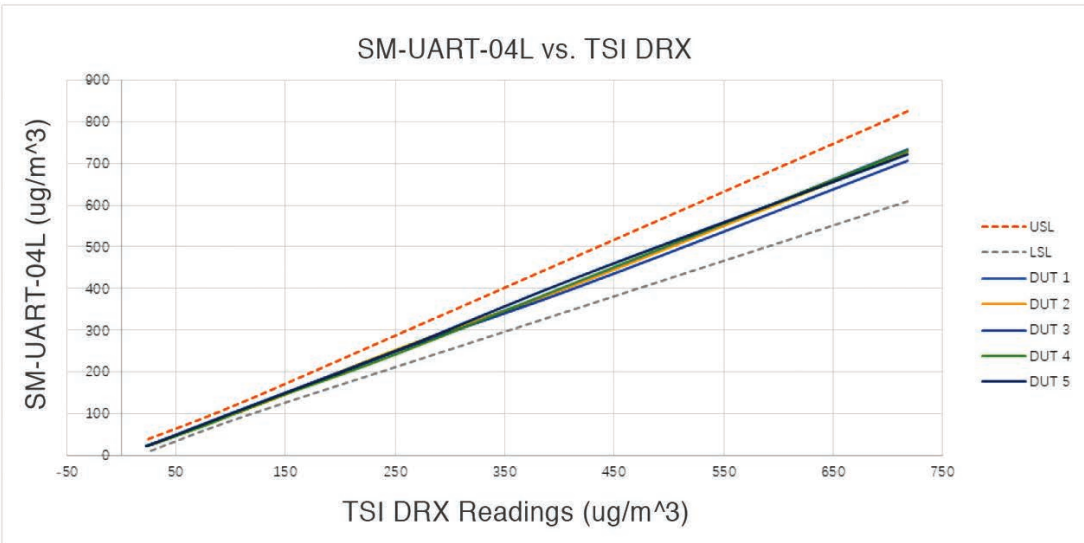


Figure 2 : Sensor Data Consistency

**Notes:**

- Test Chamber: 3m³
- Test System: H/W and S/W - Developed by Amphenol Advanced Sensors, fan, air purifier system, cigarette lighter
- Instrument: Standard sensor, TSI8530
- Particle: Cigarette smoke (Hong Tashan), particle size approx 1μm
- Temp Control: 25 ±5°, Humidity: 30-70% RH
- Power: 5.0 ±0.02 Volt

Environmental Conditions:

- Environment light under 400 lux (Ref: office 300~400 lux)
- No high voltage or electrical source
- Do not touch during testing
- No unintentional contamination source

# SM-UART-04L Particulate Dust Sensor

## Packing Specifications

| Length (L) | Width (W) | Height (H) | Inner Qty | Total Qty | Weight |
|---|---|---|---|---|---|
| 418.2mm | 295mm | 210mm | 5 layer | 200 pcs | 5kg max |

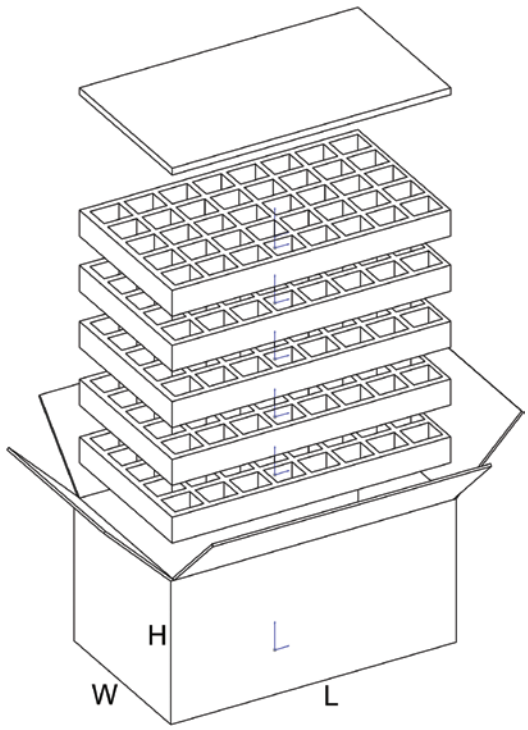


## Application Notes

### Grounding

The metal case is internally connected to GND. Do not strip the metal case.

### Maintenance

The product is designed to be maintenance free.

Do not attempt to disassemble the device. There are no user-serviceable parts in the module. Disassembly will invalidate warranty.

### Electromagnetic (EM) Noise

Excessive electromagnetic (EM) noise may degrade sensor performance. Shield sensor from EM noise in application.

### Vibration

Excessive vibration may degrade sensor's performance. Please keep sensor far from vibration in application.

### Ambient Light

Excessive ambient light may degrade sensor performance. Keep sensor far from intense direct light.

# SM-UART-04L Particulate Dust Sensor

## Mounting Orientation

Please take sensor mounting orientation into consideration to avoid the influence of adhered dust. It is recommended that the sensor be installed vertically, as shown below:

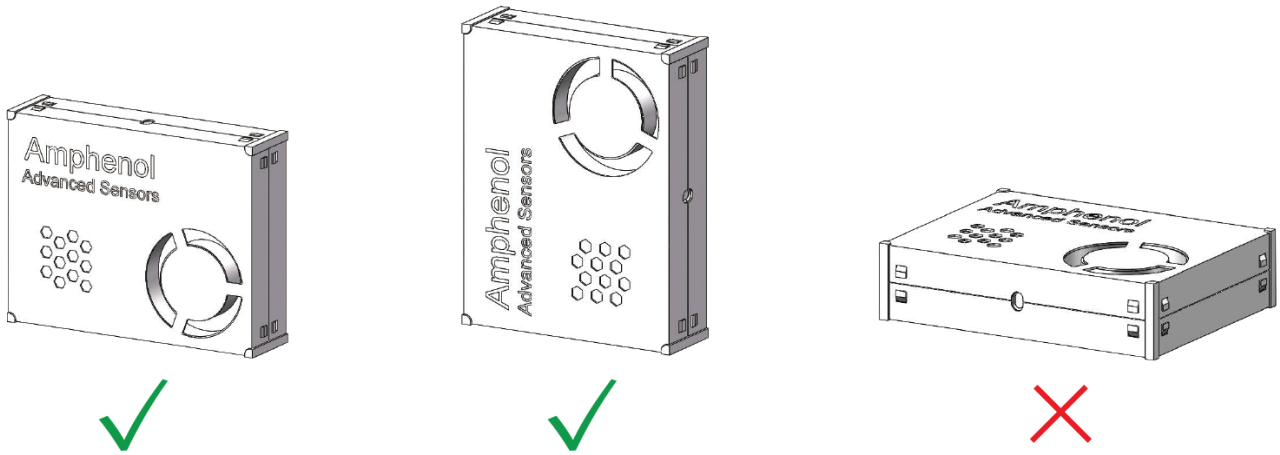


In addition, please avoid any adhesive particles (fur, oil, etc). If particles adhere to optical part, malfunction may occur.

## Ordering Information

| Part No. | Description |
|---|---|
| SM-UART-04L | Laser dust sens |
| CTDS-302178-P14A | Connector PCB |

**Note:** CTDS-302178-P14A is an eccessory.  Refer to Appendix A.

# Appendix A: CTDS-302178-P14A Connector PCB Drawing

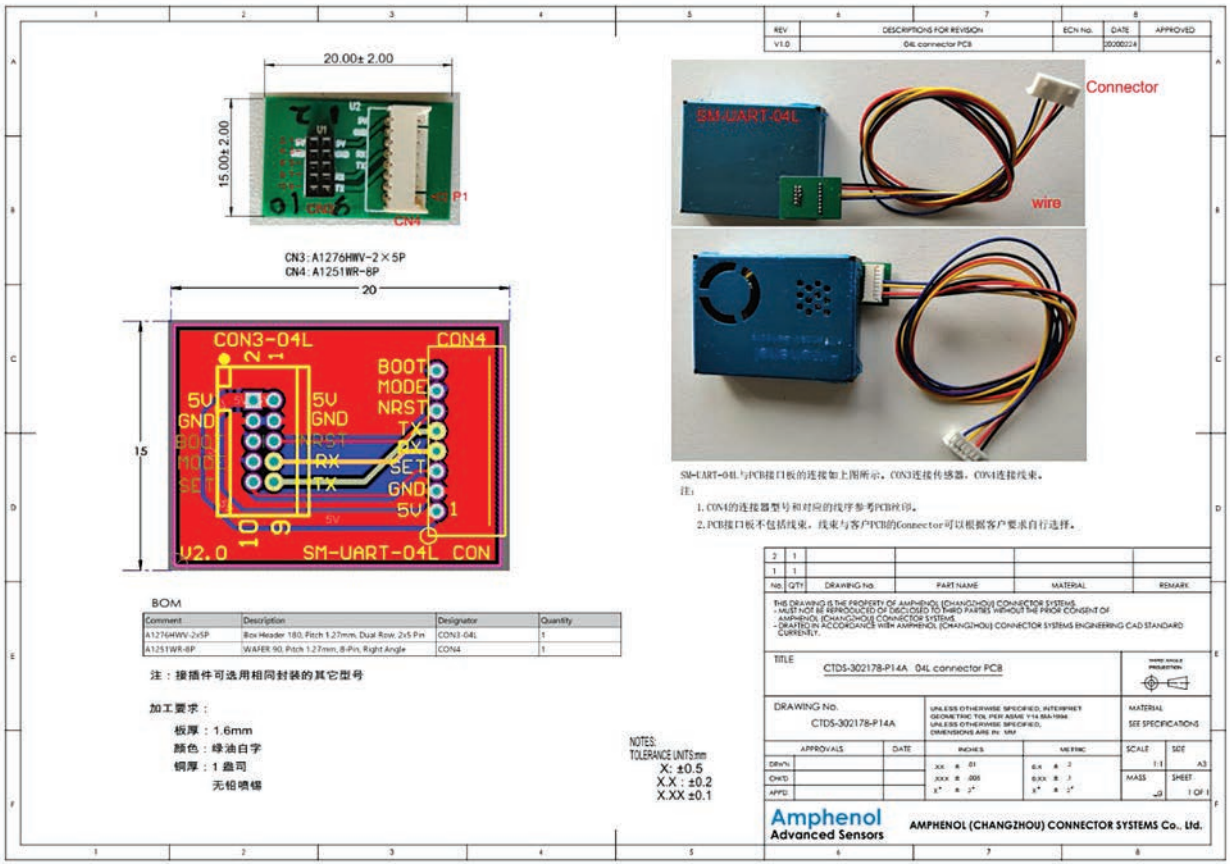


**Note:** CTDS-302178-P14A does not include wiring harness.






AAS-916-139C_EN - 04/2020