THIS DRAWING IS UNPUBLISHED. RELEASED FOR PUBLICATION -.-. -
© COPYRIGHT - By - ALL RIGHTS RESERVED.

LOC	DIST
AD	25

REVISIONS

P	LTR	DESCRIPTION	DATE	DWN	APVD
	J1	REVISED PER ECO-11-004835	11MAR11	RK	HMR

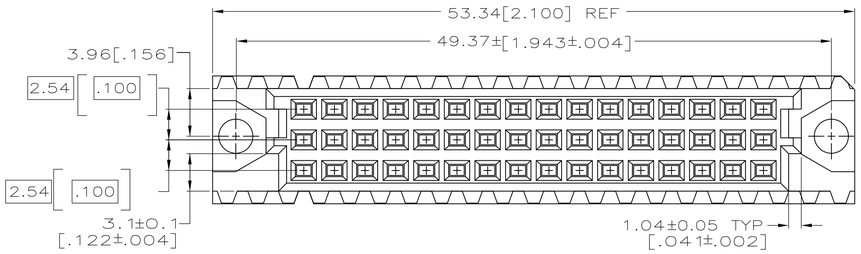

1. HOUSING MATERIAL: GLASS-FILLED POLYESTER. COLOR: GRAY.
2. CONTACT MATERIAL: PHOSPHOR BRONZE.
3. CONTACT FINISH: 0.00076[.000030] GOLD IN CONTACT AREA. 0.00127[.000050] NICKEL UNDERPLATE ALL OVER. TIN-LEAD PLATE ON POSTS.
4. PART NUMBER, DATE CODE IDENTIFICATION, CSA LOGO IN THIS APPROXIMATE AREA, ON REVERSE SIDE.
5. POINT OF MEASUREMENT FOR GOLD.
6. RECOMMENDED HOLE SIZE FOR MANUAL APPLICATION OF CONNECTOR ONTO PC BOARD.
7. CONTACT FINISH: DIN 41612 CLASS 3 IN CONTACT AREA. 0.00127[.000050] NICKEL UNDERPLATE ALL OVER. TIN-LEAD ON POSTS.
8. CONTACT FINISH: DIN 41612 CLASS 2 IN CONTACT AREA. TIN-LEAD PLATE ON POSTS.

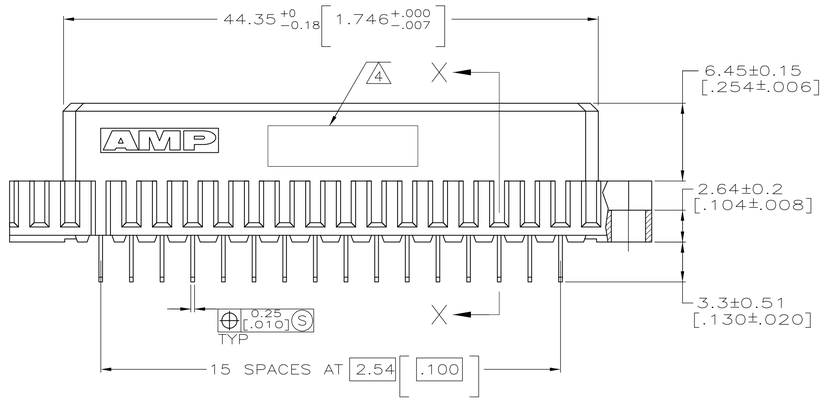

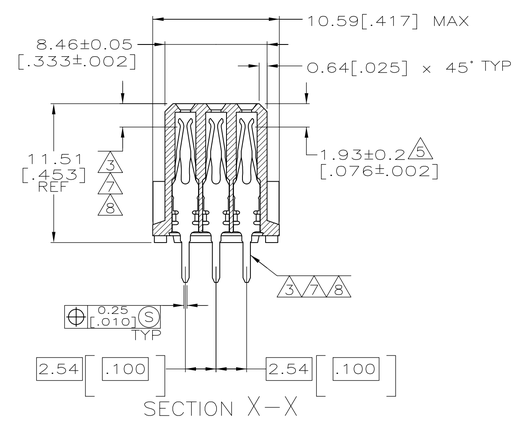

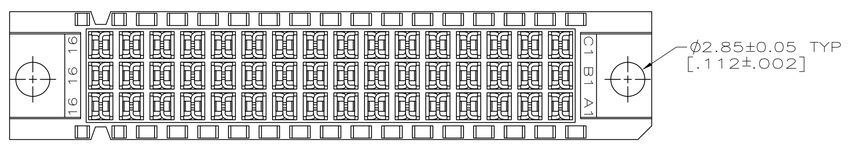

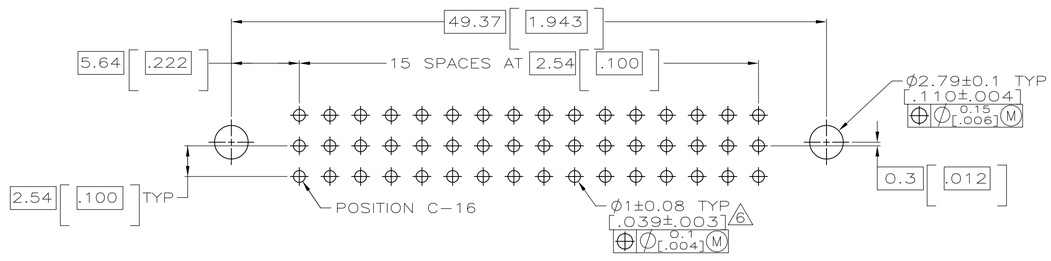

PC BOARD LAYOUT

NOTES	POSITIONS LOADED	ROWS LOADED C	ROWS LOADED B	ROWS LOADED A	NO. OF LOADED POSITION	PART NUMBER
OBSOLETE 7	1 THRU 16	X	X	X	48	535070-9
8	1 THRU 16	X	X	X	48	535070-5
3	1 THRU 16	X	X	X	48	535070-4

THIS DRAWING IS A CONTROLLED DOCUMENT.

DIMENSIONS: MM[INCHES]

TOLERANCES UNLESS OTHERWISE SPECIFIED:
0 PLC ± -
1 PLC ± -
2 PLC ± -
3 PLC ± 0.13[.005]
4 PLC ± -
ANGLES ± -

MATERIAL
HOUSING: 1
CONTACT: 2

FINISH
CONTACT: 3 7 8

DWN	L. BRINER	5/8/89
CHK	J. BROWN	5/15/89
APVD	J. BROWN	5/15/89
PRODUCT SPEC	—	
APPLICATION SPEC	—	
WEIGHT	—	

TE Connectivity

NAME: ASSEMBLY, RECEPTACLE, EUROCARD, TYPE C, SOLDER TAIL, 48 POSITION

SIZE	CAGE CODE	DRAWING NO	RESTRICTED TO
A1	00779	C-535070	—

CUSTOMER DRAWING | SCALE 4:1 | SHEET 1 OF 1 | REV J1

4805 (3/11)