ON Semiconductor

Schematic for the NCN51206GEVB Evaluation Board

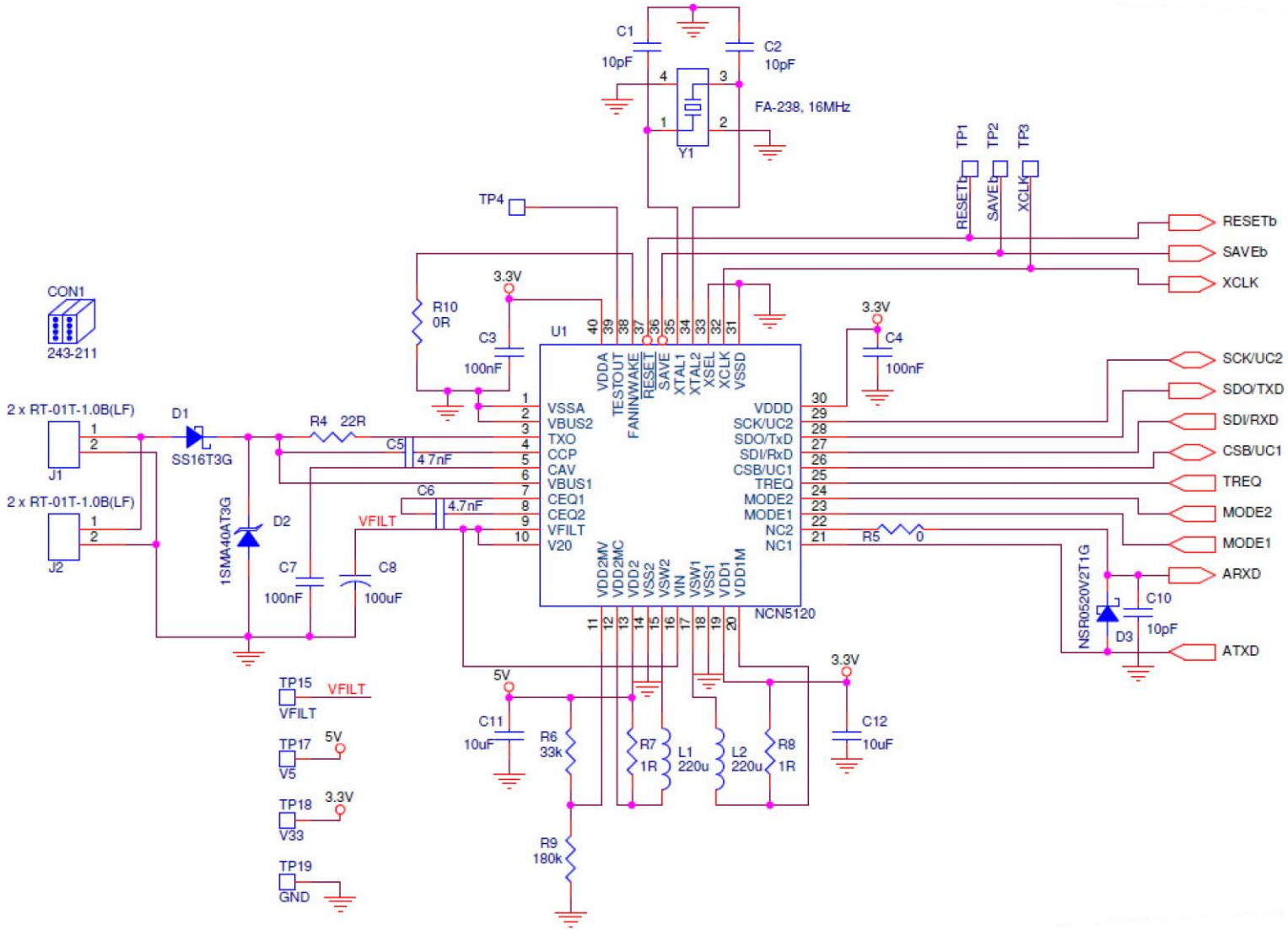

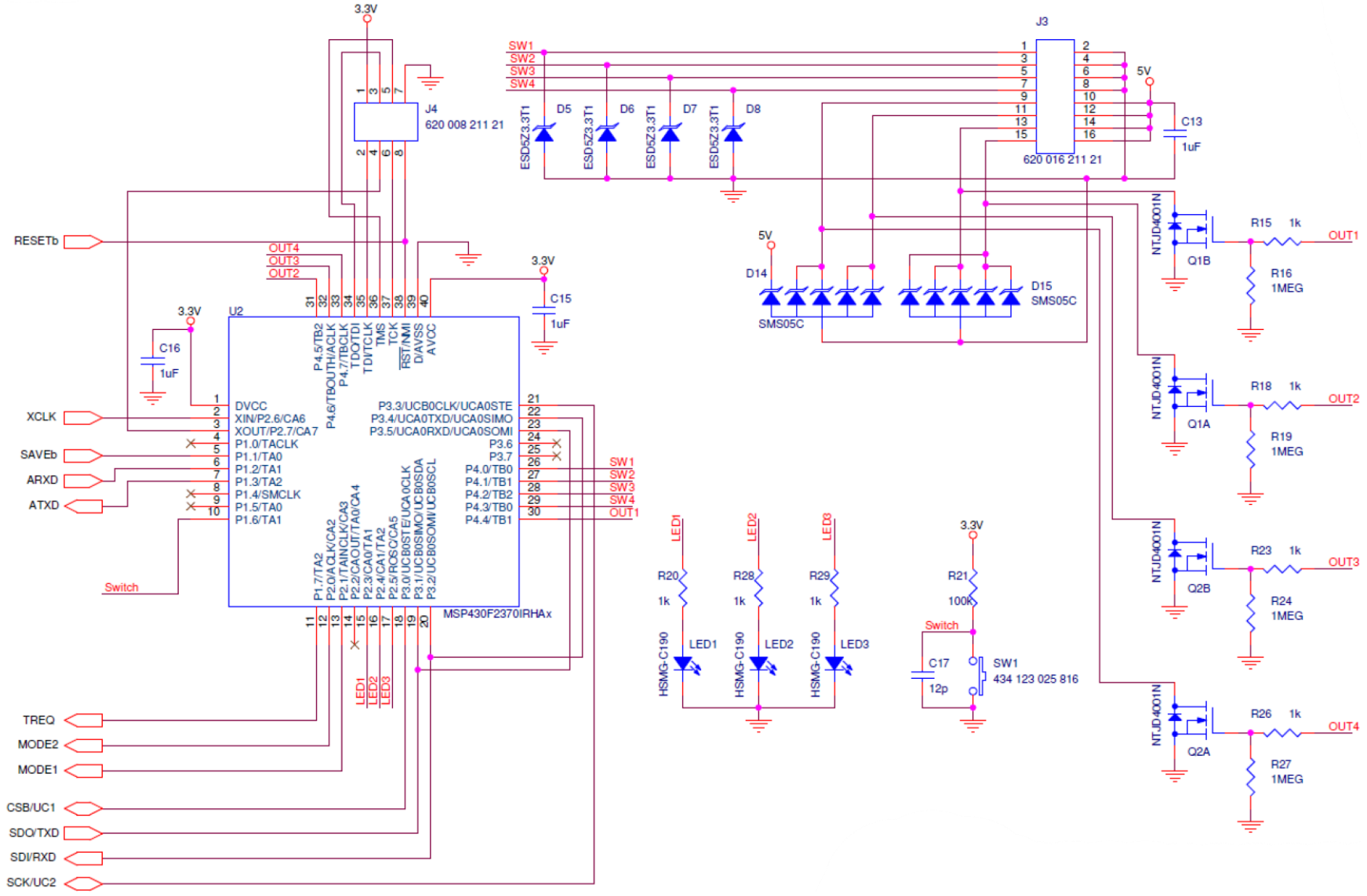
3.3V
J4
620 008 211 21
J3
620 016 211 21
SW1
SW2
SW3
SW4
5V
C13
1uF
D5
D6
D7
D8
ESD5Z3.3T1
RESETb
OUT4
OUT3
OUT2
C15
1uF
C16
1uF
U2
XCLK
SAVEb
ARXD
ATXD
Switch
DVCC
XIN/P2.6/CA6
XOUT/P2.7/CA7
P1.0/TACLK
P1.1/TA0
P1.2/TA1
P1.3/TA2
P1.4/SMCLK
P1.5/TA0
P1.6/TA1
P1.7/TA2
P2.0/ACLK/CA2
P2.1/TAINCLK/CA3
P2.2/CAOUT/TA0/CA4
P2.3/CA0/TA1
P2.4/CA1/TA2
P2.5/ROSC/CA5
P3.0/UCB0STE/UCA0CLK
P3.1/UCB0SIMO/UCB0SDA
P3.2/UCB0SOMI/UCB0SCL
P3.3/UCB0CLK/UCA0STE
P3.4/UCA0TXD/UCA0SIMO
P3.5/UCA0RXD/UCA0SOMI
P3.6
P3.7
P4.0/TB0
P4.1/TB1
P4.2/TB2
P4.3/TB0
P4.4/TB1
P4.5/TB2
P4.6/TBOUTH/ACLK
P4.7/TBCLK
TDO/TDI
TDI/TCLK
TMS
TCK
RST/NMI
D/AVSS
AVCC
MSP430F2370IRHAx
OUT1
LED1
LED2
LED3
TREQ
MODE2
MODE1
CSB/UC1
SDO/TXD
SDI/RXD
SCK/UC2
D14
SMS05C
D15
SMS05C
NTJD4001N
Q1B
Q1A
Q2B
Q2A
R15 1k
R16 1MEG
R18 1k
R19 1MEG
R23 1k
R24 1MEG
R26 1k
R27 1MEG
OUT1
OUT2
OUT3
OUT4
R20 1k
R28 1k
R29 1k
HSMG-C190
R21 100k
C17 12p
SW1 434 123 025 816