DRAWING MADE IN THIRD ANGLE PROJECTION

THIS DRAWING IS UNPUBLISHED. RELEASED FOR PUBLICATION ,19 .

© COPYRIGHT 19 BY AMP INCORPORATED, HARRISBURG, PA. ALL INTERNATIONAL RIGHTS
104072 AMP PRODUCTS MAY BE COVERED BY U.S. AND FOREIGN PATENTS AND/OR PATENTS PENDING.

LOC	DIST
AD	39

P	F	ZONE	LTR	REVISIONS DESCRIPTION	DATE	APPROVED
			0	REL WAS 5990-608	-	-
✓	✓		A	REV LOC & DIST AD-4171	3-90	BF
			B	REVISED PER ECO-20-013343	25SEP20	JO

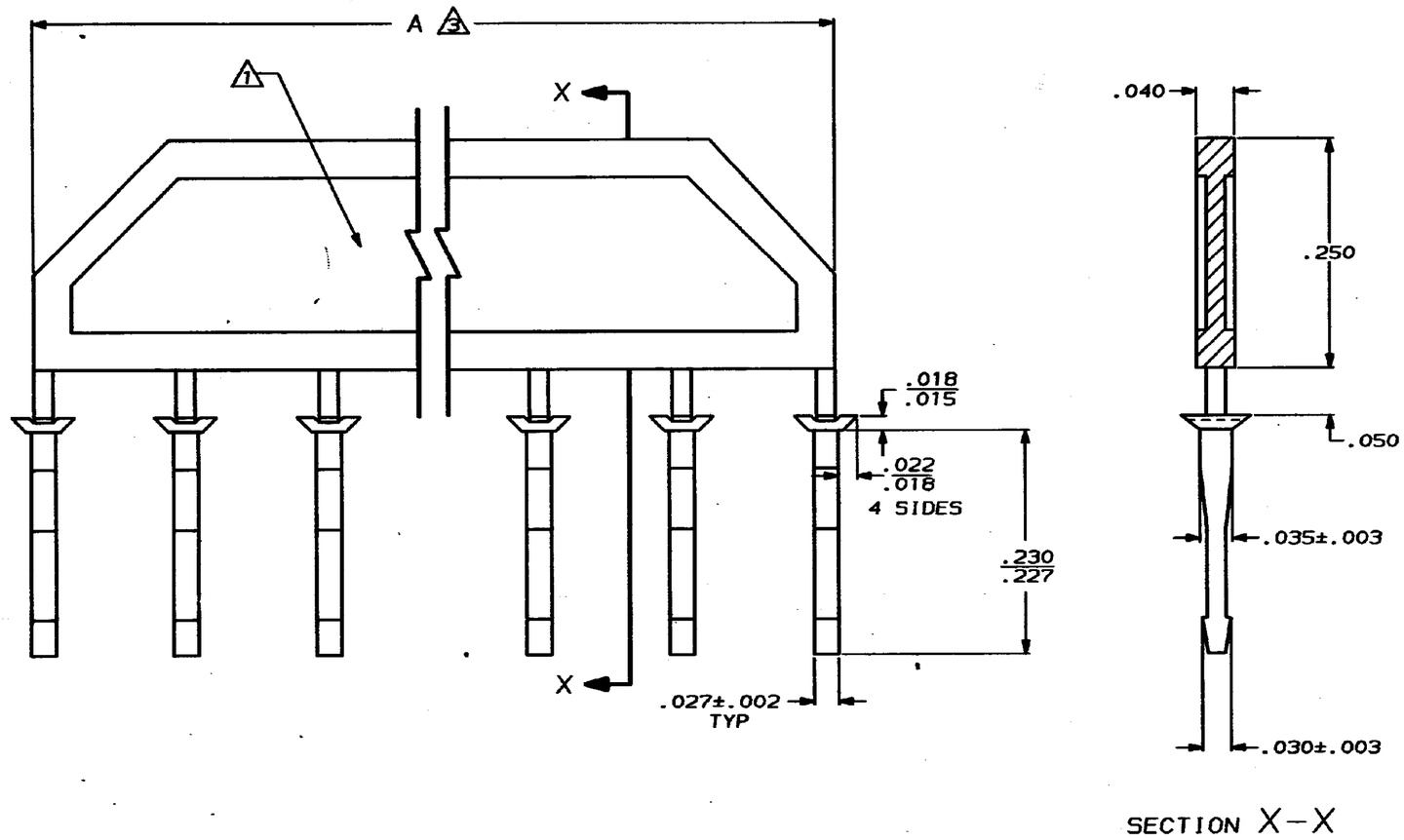

1.372	10 2	104072-1
A	NO OF PLUGS	PART NUMBER

1 "AMP" TRADEMARK ON SURFACE INDICATED

2 MINIMUM OF EIGHT KEYING PLUGS ARE TO BE ATTACHED TO THE CARRIER

3 THIS DIMENSION APPLIES OVER THE CARRIER AREA, IT DOES NOT CONTROL THE KEYING PLUGS

UNLESS OTHERWISE SPECIFIED DIMENSIONS ARE IN INCHES
TOLERANCES ON :
2 PL DEC ± -
3 PL DEC ± .005
ANGLES ± -

MATERIAL: FLAME RETARDANT THERMOPLASTIC COLOR-CLEAR

FINISH:

DR 4-16-87 H MOLL
CHK 4-16-87 L. MAYER
APPD 4-16-87 P. DeJONG
APPD 4-16-87 J. SCHIEFER
PRODUCT SPEC -
APPLICATION SPEC -
WEIGHT -

AMP INCORPORATED Harrisburg, Pa. 17105

NAME KEYING PLUGS, MTE

SIZE	FSCM NO	DRAWING NO	
C	00779	104072	
SCALE 10:1	SHEET 1 OF 1		REV B

CUSTOMER DRAWING

AMP 1471-7 REV 10-84