PART NO.	A22026-001	REV	ECO	DATE	APP
		C	96877	07-13-10	TLM

MATERIALS & SPECIFICATIONS

INSULATOR:
LIQUID CRYSTAL POLYMER (LCP) PER ASTM D5138.

CONTACT:
COPPER ALLOY PER MIL-DTL-83513. GOLD PLATE PER ASTM B488, (HARD GOLD) TYPE II CODE C, CLASS 1.27.

TERMINATION:
COPPER ALLOY PER MIL-DTL-83513 GOLD PLATED PER ASTM B488, (HARD GOLD) TYPE II CODE C CLASS 1.27.

LATCH BOX:
BERYLLIUM COPPER PER ASTM B194 NICKEL PLATE PER AMS-C-26074.

CURRENT CAPACITY:
3 AMP MAX.

CONTACT RESISTANCE:
26 MILLIOHMS (65mV) MAX @ 2.5 AMPS.

PERFORMANCE:
PRODUCT FAMILY TESTED TO AND PASSED THE PERFORMANCE SPECIFICATIONS OF TABLE VII OF MIL-DTL-83513.

ACTUAL SIZE

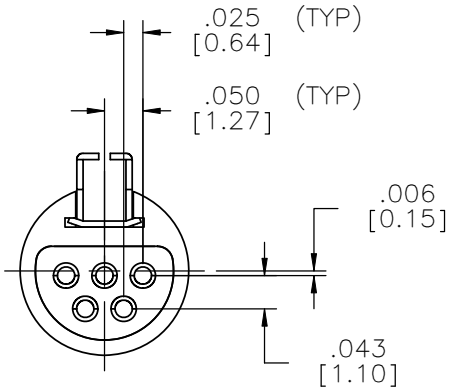

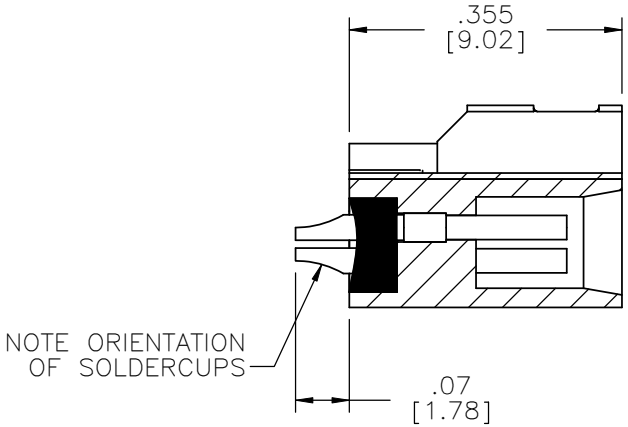

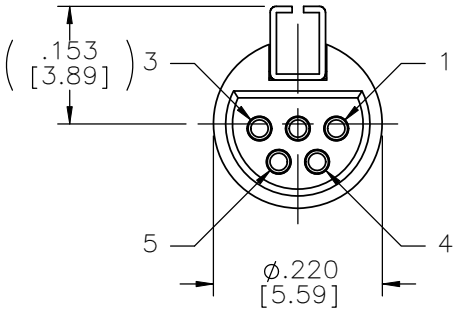

REF: OMNETICS

MCS / SLDW	THIRD ANGLE -TOLERANCES- UNLESS OTHERWISE NOTED DIMENSIONS IN INCHES 2 PL DEC± .01 3 PL DEC± .005 4 PL DEC± .0005 ANGLES ± 1°	THIS DRAWING CONTAINS CONFIDENTIAL AND PROPRIETARY INFORMATION WHICH IS THE PROPERTY OF OMNETICS CONNECTOR CORP. THIS DOCUMENT MAY NOT, IN WHOLE OR IN PART, BE DUPLICATED, OR DISCLOSED FOR ANY PURPOSE, WITHOUT WRITTEN PERMISSION FROM OMNETICS CONNECTOR CORP. DFTM. TEP — DATE 12-24-07 CHK'D. — DATE APP'D. — DATE	TITLE: (5) SOCKET FEMALE MICRO CIRCULAR CONNECTOR W/ LATCH	OMNETICS CONNECTOR CORPORATION 7260 COMMERCE CIRCLE EAST MINNEAPOLIS, MN 55432 WWW.OMNETICS.COM	CAGE CODE 61873 DWG NO. A22026-001 SHEET 1 OF 1 SCALE: 4:1 REV C