NOTES:

1. MATERIALS AND FINISHES:
   BODY - BRASS, WHITE BRONZE PLATING
   CONTACT - BeCu, SILVER PLATING
   INSULATORS - PTFE, NATURAL
   O-RING - SILICONE RUBBER, RED
   OUTER CONTACT - PHOSPHOR BRONZE, WHITE BRONZE PLATING

2. ELECTRICAL:
   A. IMPEDANCE: 50 OHM
   B. FREQUENCY RANGE: DC - 20 GHz
   C. VSWR(RETURN LOSS): 33 dB @ DC - 4 GHz
      30 dB @ 4 - 6 GHz
   D. DIELECTRIC WITHSTANDING VOLTAGE: 1000 VRMS, MIN.
   E. INSULATION RESISTANCE: 3000MΩ MIN.
   F. INTERMODULATION 3rd ORDER: -166 dBc @2X20W

3. MECHANICAL:
   A. DURABILITY: 100 CYCLES MIN.
   B. TEMPERATURE RANGE: -65° C TO +165° C

4 SHOWS CABLE ENTRY DIMENSIONS

5. PACKAGING:
   A. QUANTITY: SINGLE PACK
   B. MARKING: PACKAGING TO BE MARKED
      "AMPHENOL RF, 225-102J-52S & DATE CODE"

CABLE ASSEMBLY INSTRUCTIONS:
A. TRIM CABLE AS SHOWN.
B. INSERT TRIMMED CABLE THROUGH BACK OF CONNECTOR AND PAST INTERFACE END.
C. SLIDE INSULATOR DISC ONTO CABLE.
D. USING ROHS COMPLIANT SOLDER, SOLDER CENTER CONTACT TO CENTER CONDUCTOR.
E. PULL CABLE BACK THROUGH CONNECTOR AND PRESS CENTER CONTACT/INSULATOR ASSEMBLY UNTIL INSULATOR BOTTOMS AGAINST BODY.
F. USING ROHS COMPLIANT SOLDER, SOLDER CABLE JACKET TO I.D. OF CONNECTOR BODY. MAKE SURE SOLDER FLOWS AROUND THE ENTIRE CIRCUMFERENCE OF THE CABLE MAKING A WATERTIGHT SEAL.

THIRD ANGLE PROJ.

REVISIONS				
REV	DESCRIPTION	DATE	ECN	APPR
A	RELEASE TO MFG.	19-Jul-19	12429	SV

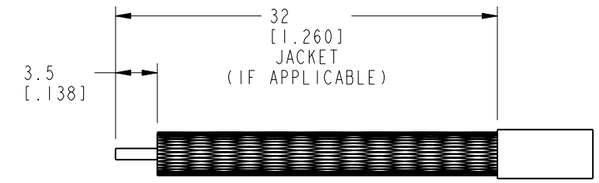

SCALE 2.000

RECOMMENDED CABLE STRIPPING DIMS.

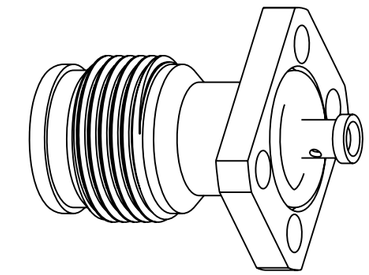

SCALE 2.000

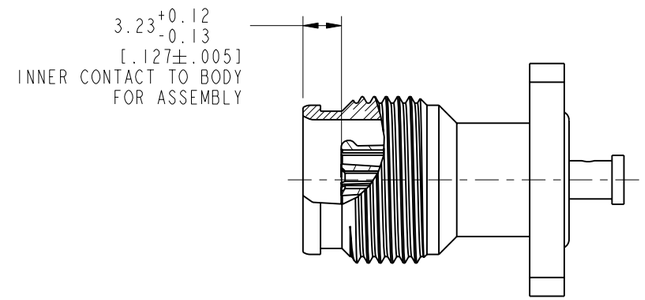

SECTION B-B
SCALE 2.000

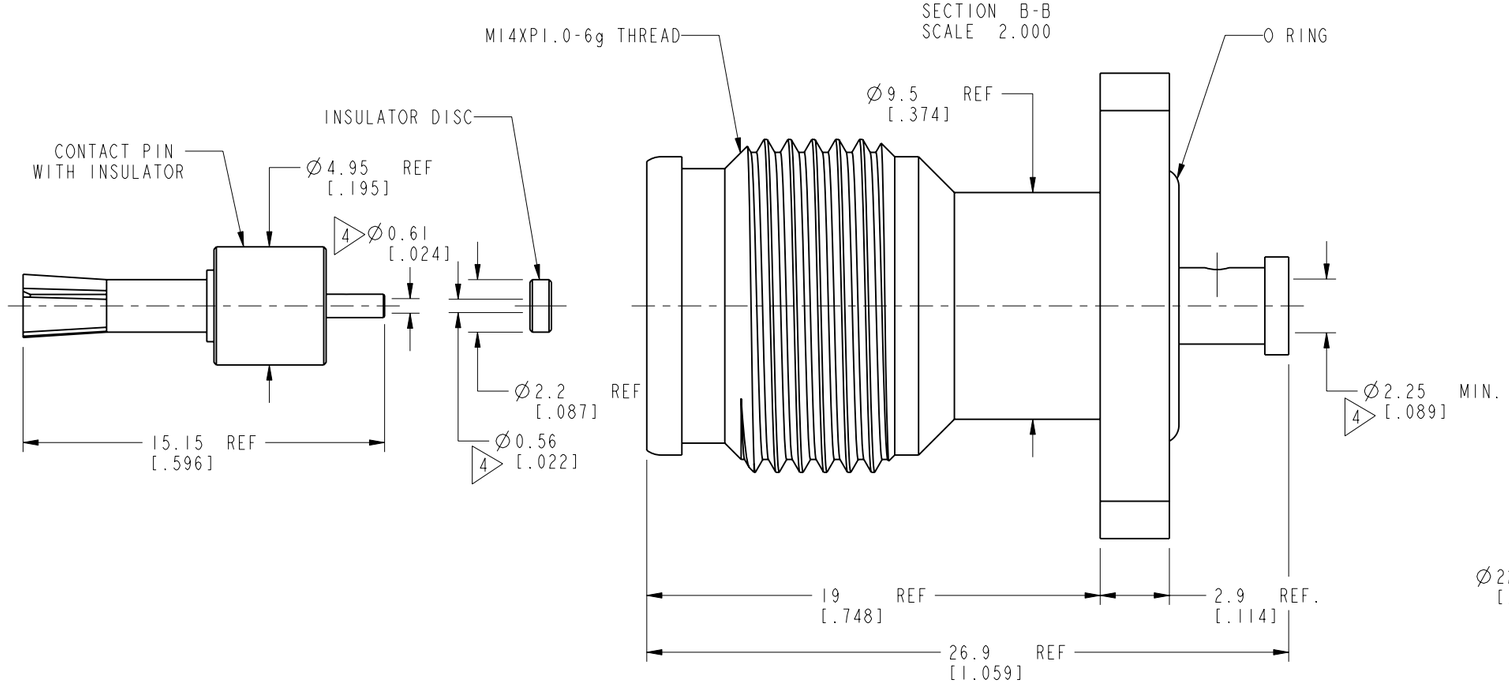

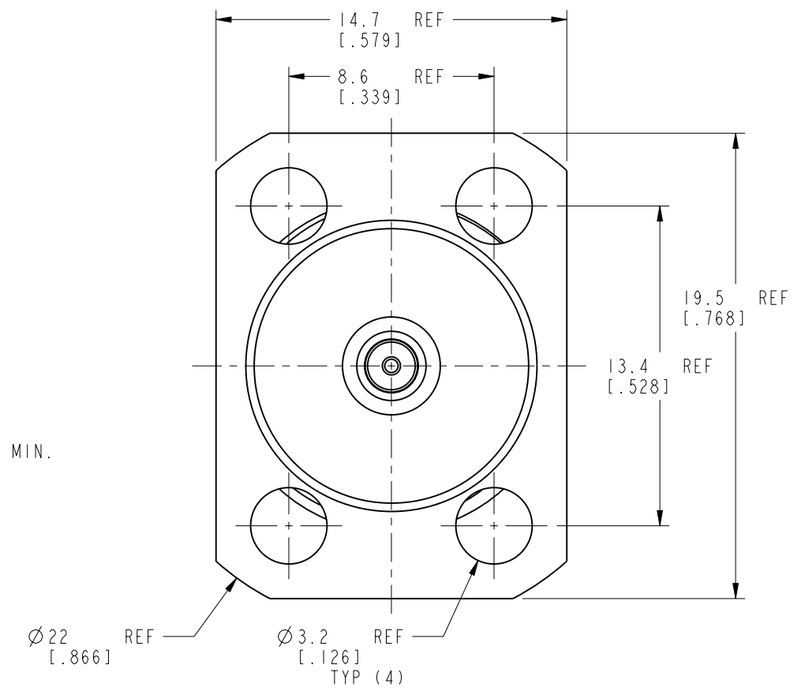

CUSTOMER OUTLINE DRAWING

ALL OTHER SHEETS ARE FOR INTERNAL USE ONLY

UNLESS OTHERWISE SPECIFIED, DIMENSIONS ARE IN METRIC AND TOLERANCES ARE:

<0.5mm	0.5 - 6mm	6 - 30mm	30 - 120mm	ANGLES
± 0.05mm	±0.1mm	±0.2mm	± 0.3mm	±1°

NOTICE - These drawings, specifications, or other data (1) are, and remain the property of Amphenol corp. (2) must be returned upon request; and (3) are confidential and not to be disclosed to any person other than those to whom they are given by Amphenol Corp. the furnishing of these drawings, specifications, or other data by Amphenol Corp., or to any other person to anyone for any purpose is not to be regarded by implication or otherwise in any manner licensing, granting rights to permitting such holder or any other person to manufacture, use or sell any product, process or design, patented or otherwise, that may in any way be related to or disclosed by said drawings, specifications, or other data.

MATERIAL
SEE NOTES

REFERENCE
EAR# 8104
REF: ---

CONFIGURATION LEVEL: In Work

FINISH

DRAWN	DATE
M.ZHANG	31-Jul-19
ENGINEER	DATE
S.DUAN	8-Aug-19
APPROVED	DATE
S.HSIEH	8-Aug-19
CAD FILE	

TITLE
2.2-5 FLANGE JACK FOR RG-405 OR .085" SEMI-RIGID CABLE

SCALE: 4.0:1.0 | SHEET 2 OF 2

DWG SIZE: B | REV: A

Amphenol RF
www.amphenolrf.com

DRAWING NO. 225-102J-52S
ITEM NO. 225-102J-52S
PART NO. 225-102J-52S