© 2006 TE Connectivity. All Rights Reserved.

REVISIONS					
P	LTR	DESCRIPTION	DATE	DWN	APVD
	C3	REVISED PER ECN-22-146347	05APR2022	RZ	WK

	DIE SET	G	F	E	D	C	B	A	CABLE GROUPS	PART NO.
		DIMENSIONS								
	–	9.50	19.40	6.00	6.70	8.70	10.00	10.50	CT125	5-1814821-7
OBSOLETE	~~–~~	~~9.50~~	~~19.40~~	~~6.00~~	~~6.70~~	~~8.70~~	~~10.00~~	~~10.50~~	~~CT125~~	~~5-1814821-6~~
OBSOLETE	~~9-1478243-0~~	~~8.50~~	~~19.40~~	~~4.85~~	~~5.70~~	~~7.70~~	~~9.00~~	~~9.50~~	~~CT100~~	~~5-1814821-5~~
OBSOLETE	~~9-1478243-0~~	~~8.50~~	~~19.40~~	~~4.85~~	~~5.70~~	~~7.70~~	~~9.00~~	~~9.50~~	~~CT100~~	~~5-1814821-4~~
	~~1583581-1~~	~~10.20~~	~~19.40~~	~~4.85~~	~~5.50~~	~~9.50~~	~~10.80~~	~~11.20~~	~~RG6/U~~	~~5-1814821-3~~
OBSOLETE	~~1583581-1~~	~~10.20~~	~~19.40~~	~~4.85~~	~~5.50~~	~~9.50~~	~~10.80~~	~~11.20~~	~~RG6/U~~	~~5-1814821-2~~
	~~9-1478243-0~~	~~8.50~~	~~20.40~~	~~3.90~~	~~4.70~~	~~7.50~~	~~9.00~~	~~9.50~~	~~RG59B/U, 62A/U, 140/U, 210/U, URM90, Belden 9291, 9291, KX6A, KX25, KX52, KX53~~	~~5-1814821-1~~
OBSOLETE	~~9-1478243-0~~	~~8.50~~	~~20.40~~	~~3.90~~	~~4.70~~	~~7.50~~	~~9.00~~	~~9.50~~	~~RG59B/U, 62A/U, 140/U, 210/U, URM90, Belden 9291, 9291, KX6A, KX25, KX52, KX53~~	~~5-1814821-0~~

NOTES

1. SINGLE PACK IN ACCORDANCE WITH AMP SPEC 107-3275
2. 100 TRAY PACK IN ACCORDANCE WITH AMP SPEC 107-3275
3. Ni PLATING
4. HAND TOOL: 9-1478240-0
5. FOR TECHNICAL DATA REFER TO YOUR LOCAL TE CONNECTIVITY SALES OFFICE
6. ALL DIMENSIONS ARE NOMINAL FOR REFERENCE ONLY UNLESS OTHERWISE STATED

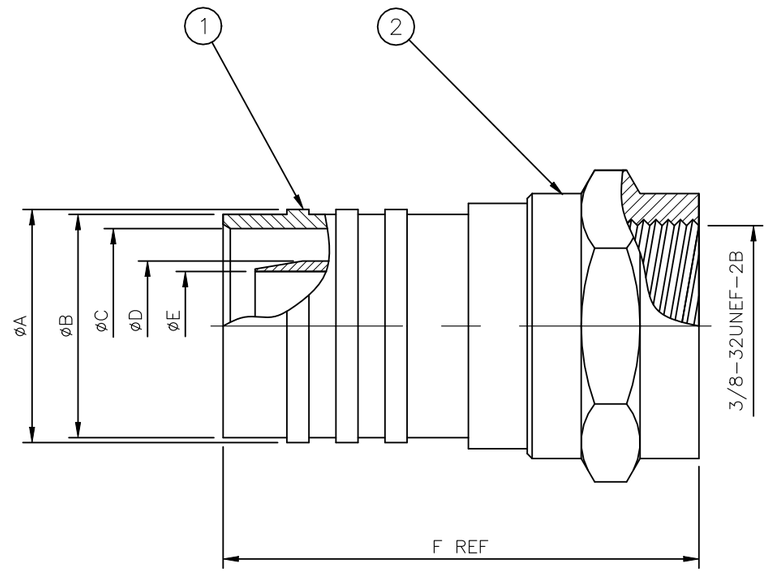

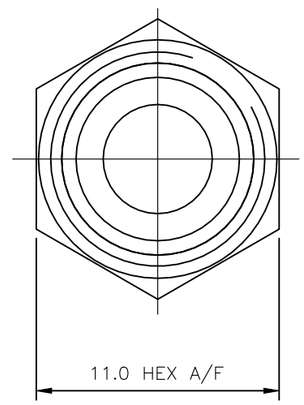

RECOMMENDED CABLE STRIPPING DIM'S

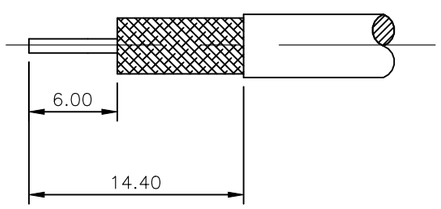

RECOMMENDED CRIMP OUTER FERRULE A/F HEX

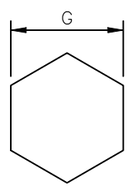

QUANTITY PER ASSY								PARTS LIST		
	OBSOLETE	OBSOLETE	OBSOLETE	OBSOLETE	OBSOLETE	OBSOLETE	OBSOLETE			
1	1	1	1	1	1	1	1	ZINC ALLOY 3	COUPLING NUT	2
1	1	1	1	1	1	1	1	BRASS 3	BODY	1
5--7	5--6	5--5	5--4	5--3	5--2	5--1	5--0	MATERIAL	DESCRIPTION	ITEM
2	1	1	2	2	1	1	2			

THIS DRAWING IS A CONTROLLED DOCUMENT.

DIMENSIONS: mm

TOLERANCES UNLESS OTHERWISE SPECIFIED:

0 PLC	± 0.5
1 PLC	± 0.4
2 PLC	± 0.3
3 PLC	± –
4 PLC	± –
ANGLES	± –

MATERIAL: SEE TABLE

FINISH: –

DWN	ANSON MA	14FEB09
CHK	RITA ZUO	14FEB09
APVD	BOB ZHAO	14FEB09
PRODUCT SPEC	108-112000	
APPLICATION SPEC	—	
WEIGHT	0.000000	

TE Connectivity

NAME: – F TYPE STRAIGHT PLUG HEX CRIMP –

SIZE	CAGE CODE	DRAWING NO	RESTRICTED TO
A3	00779	C-1814821	—

CUSTOMER DRAWING

SCALE	SHEET	REV
NTS	1 OF 1	C3