SW

Revision level			Revision Record	Changed	Date	Approved	Date
Drawing	State	Part					
00.0	Design Release		SEE ECN# 015255	MHT	06/28/2019	CTF	06/28/2019

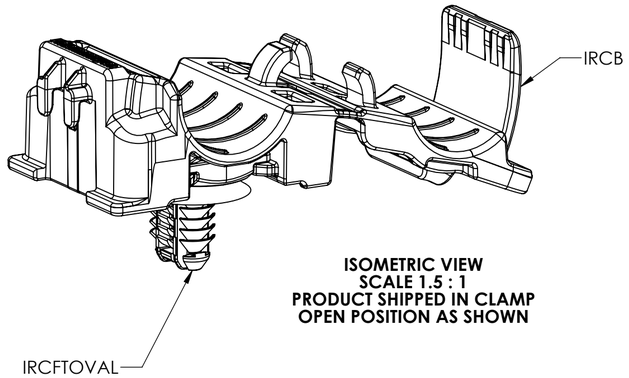

ISOMETRIC VIEW
SCALE 1.5 : 1
PRODUCT SHIPPED IN CLAMP
OPEN POSITION AS SHOWN

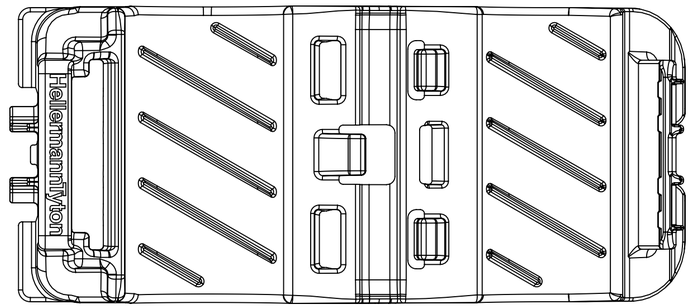

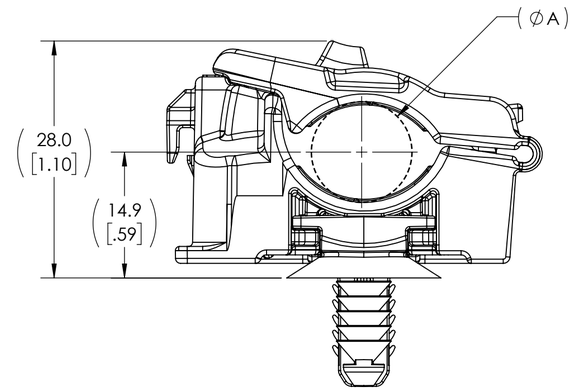

MINIMUM BUNDLE DIAMETER

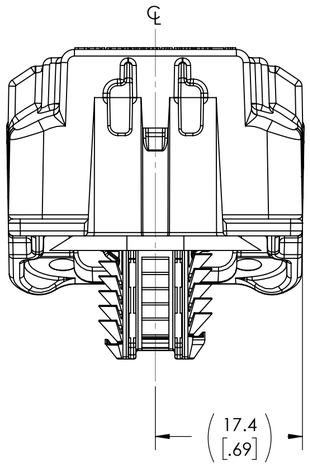

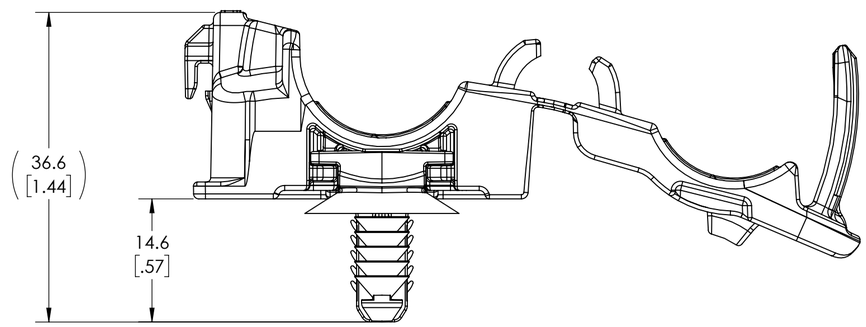

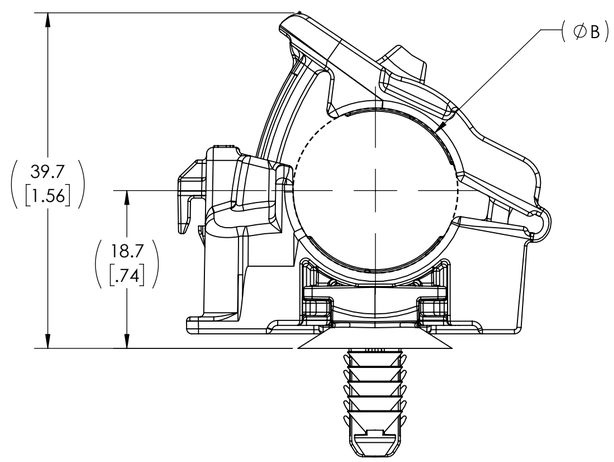

MAXIMUM BUNDLE DIAMETER

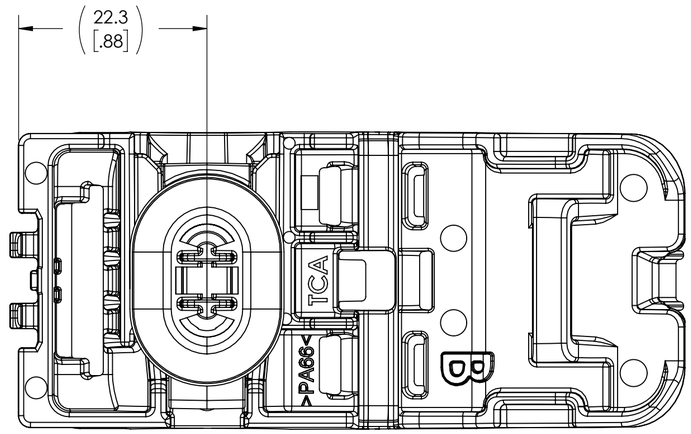

REFERENCE:

1. SHEET METAL THICKNESS RANGE: 0.60mm - 6.75mm
2. APPLICABLE HOLE SIZE:
   - A. 6.2 X 12.2mm +/-0.2
   - B. 6.5 X 12.5mm +0.2/-0.4
   - C. 6.5 X 13.0mm +/-0.2
   - D. 7.0 X 12.0mm +/-0.2

GLOBAL PART DESCRIPTION	BUNDLE TYPES	(A) MINIMUM DIAMETER	(B) MAXIMUM DIAMETER	IRCB CLAMP			IRCFTOVAL CONNECTOR CLIP		
				DRAWING	MATERIAL	COLOR	DRAWING	MATERIAL	COLOR
IRCBFTOVAL-PA66HIRHSUV-BK	SOFT	12.7 [.50]	19.5 [.77]	16-1640-002-CSU	PA66HIRHSUV	BLACK	16-1645-041-CSU	PA66HIRHSUV	BLACK
	HARD	11.9 [.47]	18.7 [.74]						

Notes

Material
SEE CHART

Units: millimeters
Dimension without tolerances details to:
.XXX = ±.013
.XX = ±.13
.X = ±.3
None = ±.8
∠ = ±0.5°
Dimension Formatted mm/[in]

The copyright of this drawing is reserved by HellermannTyton. It is issued on condition that it is not reproduced, copied, or disclosed to a third party, either wholly or in part, without the consent of HellermannTyton.

Drawn	MHT	06/24/2019
Approved	CTF	06/24/2019

HellermannTyton
North America
Email: corp@htamericas.com
Web: www.hellermann.tyton.com

Article/Type-No: IRCBFTOVAL
Title: INLINE RATCHET P-CLAMP B WITH 7x12 OVAL FIR TREE (FTOVAL)
Drawing-No: 19-0325-102-CSU
Production : Phase

Scale: 2:1
Project Number: PRP19-0325
Format: C
Sheet: 1/1