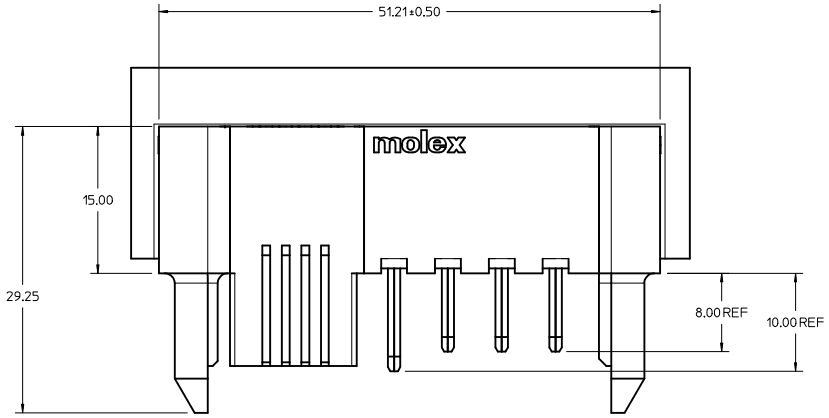

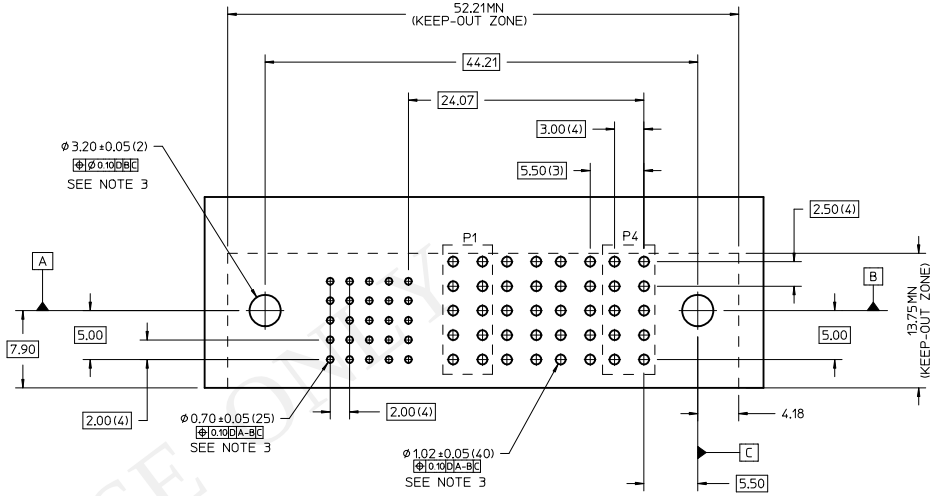

RECOMMENDED PCB LAYOUT

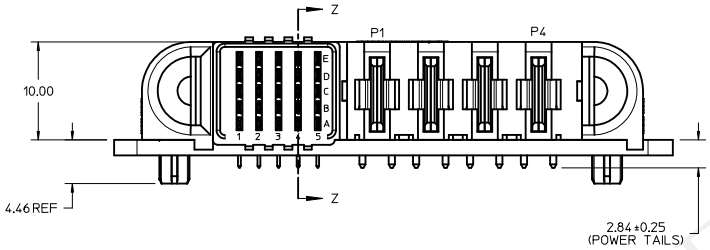

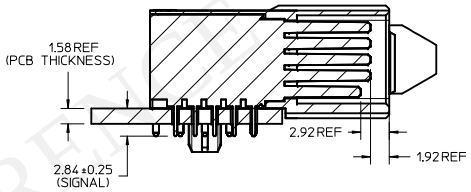

SECTION Z-Z

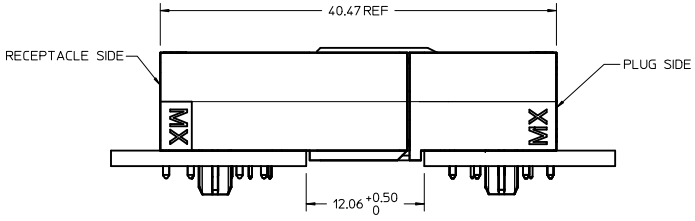

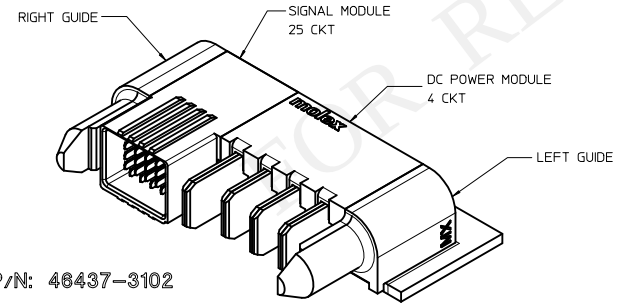

P/N: 46437-3102

NOTES:

1. MATERIAL:
   - -HOUSINGS: LCP UL94, V-0, COLOR: BLACK.
   - -TERMINALS: COPPER ALLOY.
   - -PLATING: 0.00127 NICKEL OVERALL WITH 0.00254 SELECTIVE TIN ON SOLDER TAILS AND 0.000762 SELECTIVE GOLD ON CONTACT AREA.
2. ASSEMBLIES PACKED IN TRAYS. SPQ: TBD
3. PC BOARD REQUIRES SOLDER THRU HOLES, REFER TO PS-46436-100 FOR DETAILS
4. PRODUCT SPEC: PS-46436-100.
5. APPLICATION SPEC: AS-46436-100.
6. PRODUCT TO MEET RoHs REQUIREMENTS.
7. ASSEMBLY MATES TO MOLEX RECEPTACLE ASSEMBLY P/N 46436-3102 OR 46562-3102

PRILIMINARY RELEASE EC NO: UCP2011-1446 2010/11/23 DRWN:TMPATIL CHKD:J SCHAFER APPR: SCHAFER 2011/02/03	DESCRIPTION	QUALITY SYMBOLS	GENERAL TOLERANCES (UNLESS SPECIFIED) mm / INCH	DIMENSION STYLE MM ONLY	SCALE 4:1	DESIGN UNITS METRIC	THIRD ANGLE PROJECTION
1	REV	=0	4 PLACES ±--- / ±---	DRAWN BY TMPATIL DATE 2010/11/23	TITLE RA PLUG ASSY 25S-4P TEN60 POWER FAMILY		
		=0	3 PLACES ±--- / ±---	CHECKED BY J SCHAFER DATE			
		=0	2 PLACES ±0.13 / ±---	APPROVED BY JSCHAFER DATE 2011/02/03	MOLEX INCORPORATED		
		=0	1 PLACE ±0.25 / ±---				
			ANGULAR ±1/2°	MATERIAL NO. 46437-3102	DOCUMENT NO. SD-46437-3102	SHEET NO. 1 OF 1	
			DRAFT WHERE APPLICABLE MUST REMAIN WITHIN DIMENSIONS	SIZE D	THIS DRAWING CONTAINS INFORMATION THAT IS PROPRIETARY TO MOLEX INCORPORATED AND SHOULD NOT BE USED WITHOUT WRITTEN PERMISSION		

FOR REFERENCE USE ONLY