Table 1. Electrical Performance

Parameter	Symbol	Min.	Typ	Max	Units
Nominal Frequency	F_{NOM}	8.000		100.000	MHz
Mode		Fundamental or 3rd Overtone			
Operating Temperature Range	T_{OP}	0/70, -10/70, -20/70, -40/85			°C
Stability Over T_{OP} [1]	F_{STAB}	±10		±100	ppm
Frequency Tolerance[2]	F_{TOL}		±10	±20	ppm
Load Capacitance	C_L	6		32	pF
Shunt Capacitance	C_o			5	pF
Drive Level			10	100	uW
Aging / 1st year (at 25 °C)	F_{AGE}			±5	ppm
Insulation Resistance		500			MOhm
Storage Temperature	T_{STO}	-40		90	°C
Equivalent Series Resistance					
Crystal Frequency	ESR				Ohm
8.000MHz-10.000MHz				60	
10.001MHz-14.000MHz				50	
14.001MHz-20.000MHz				40	
20.001MHz-40.000MHz				30	
40.000MHz-100.000MHz, 3rd Overtone				80	

Notes:
1. Referenced to the Frequency at 25 °C.
2. Frequency measured at 25 °C ± 3 °C.

Product is compliant to RoHS directive and fully compatible with lead free assembly.

Package Drawing

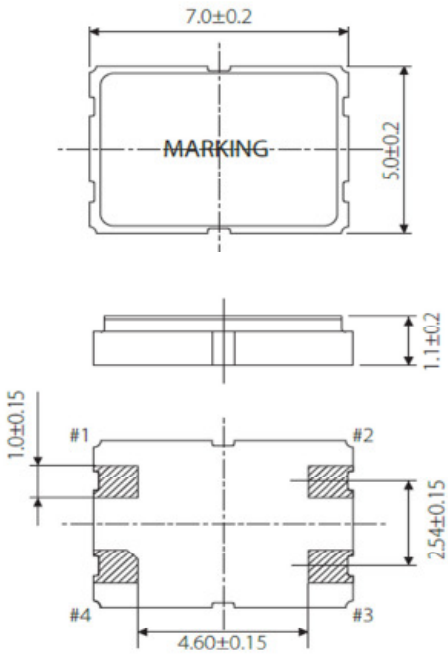

Botttom View

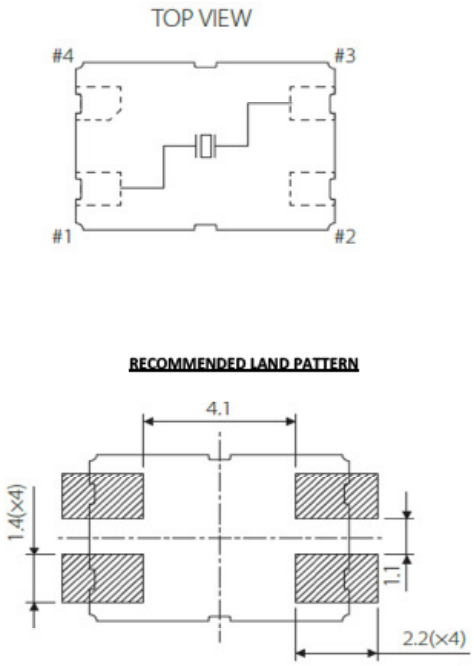

All Dimensions in mm

Part Marking:

XXMXXX
YYWWC
.XXMXXX = Frequency
YY = Year
WW= Week
C = Manufacuting Location

Alternative Marking

VXC4-XXX
XXMXX YMC
VCX4-XXX = Ordering Code
XXMXXX = Frequency
Y = Year
M = Month (A = Jan
C = Manufacturing Location

Table 2. Pinout

Pin	Function
1	Crystal
2	Connected to cover (Connect to GND
3	Crystal
4	Connected to cover (Connect to GND)

Table 2. Environmental Compliance	
Parameter	**Conditions**
Mechanical Shock	MIL-STD-883, Method 2002, Condition B
Mechanical Vibration	MIL-STD-883, Method 2007, Condition A
Temperature Cycle	MIL-STD-883, Method 1010, Condition B
Solderability	MIL-STD-202-210, Condition B
Gross and Fine Leak	MIL-STD-883, Method 1014
Altitude	MIL-STD-883, Method 1001, Condition B
Moisture Sensitivity Level	MSL 1
Contact Pads	Gold (0.2 um min) over Nickel
Weight	116 mg

Reliability & IR Compliance

Solderprofile:

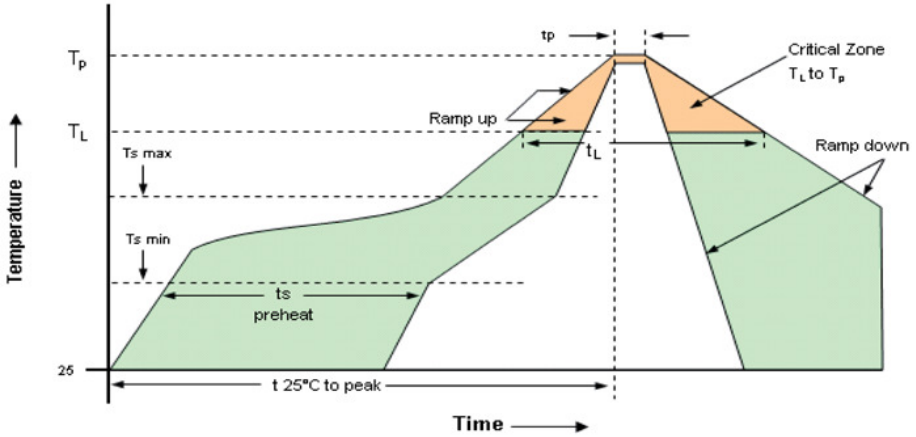

Table 3: Reflow Profile		
Parameter	**Symbol**	**Value**
PreHeat Time Ts-min Ts-max	t_S	60 sec Min, 260 sec Max 150°C 200°C
Ramp Up	R_{UP}	3 °C/sec Max
Time Above 217 °C	t_L	60 sec Min, 150 sec Max
Time To Peak Temperature	T_{AMB-P}	480 sec Max
Time at 260 °C	t_P	30 sec Max
Ramp Down	R_{DN}	6 °C/sec Max

Pads are Au over Ni and compatible with either SnPb or Pb free attachment.
MSL: 1

Tape & Reel

Table 4. Tape and Reel Dimensions (mm)

Tape												Reel						
A	B	C	D	E	F	G	H	J	K	L	M	A	B	C	D	E	W	T
7.3	5.3	16.0	7.5	1.75	8.0	4.0	2.0	1.5	1.5	0.3	1.9	180	60	21.0	13.0	2.0	16.5	1.5

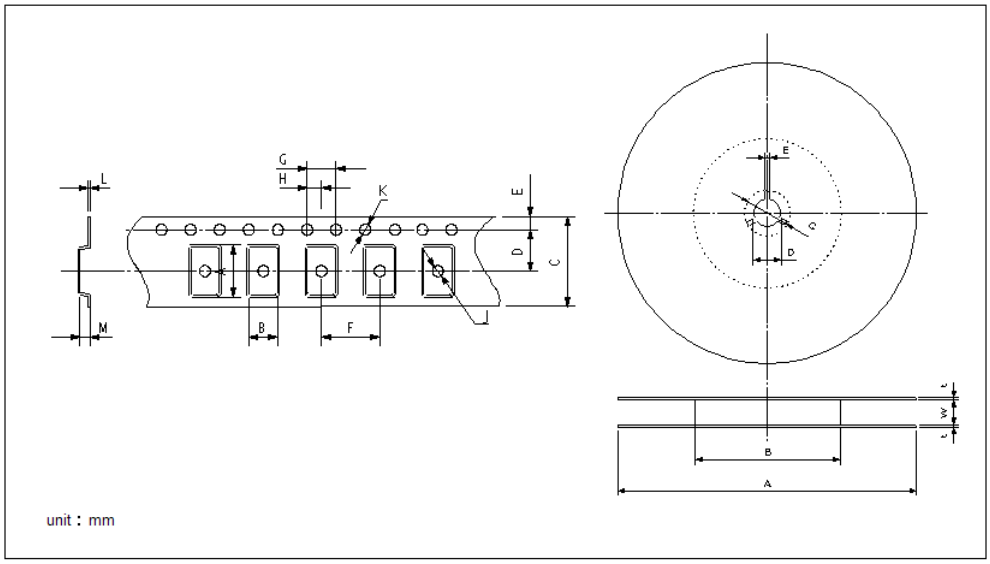

1K pieces per reel

Ordering Information

VXC4 - XXX - XX- xxMxxxxxxxXX

Product
7.0 x 5.0 x 1.1mm,
Crystal

Mode
1: Fundamental

Temp Stability
D: ±15ppm
E: ±20ppm
F: ±25ppm
G: ±30ppm
H: ±35ppm
I: ±40ppm
J: ±45ppm
K: ±50ppm
S: ±100ppm

**Note: not all combination of options are available.*
Other specifications may be available upon request.

Packaging
TR: Tape and Reel
blank: Cut Tape / non Tape and Reel quantities
_SNPB: Tin lead solder dipped

Frequency in MHz

Load Capacitance
00: Series Resonance
06-32pF

Operating Temperature
E: -40 to 85 °C
J: -20 to 70 °C
W: -10 to 70 °C
T: 0 to 70 °C

Example:

VXC4-1EE-12-25M0000000TR	**Tape and Reel**
VXC4-1EE-12-25M0000000	**Cut Tape**
VXC4-1EE-12-25M0000000_SNPB	**Tin lead solder dipped**

Revision History

Revision Date	Approved	Description
August 30, 2016	RC	Initial datasheet for factory approval and release to customer.
February 06, 2018	FB	Add device marking, update to Microsemi
Ausust 10, 2018	FB	Update logo and ordering information
June 09, 2019	FB	Update logo and contact information, add Table 2 Environmental compliance, change "SNPBDIP" to "SNPB"
April 30, 2020	FB	Add tape and reel ordering option

Previous Ordering Information for Reference Only
Do Not Use to Build a New Part Number

VXC4-1A2-10M000

Package
VXC4: 7.0x5.0, 4 pads

Mode
1 : Fundamental
3: 3rd Overtone

Stability
A: ±100 ppm over -20° C to 70° C
B: ±50 ppm over -20° C to 70° C
F: ±30 ppm over -20° C to 70° C

Load Capacitance
0: Series Resonant
1: 16 pf
2: 20 pf
4: 18 pf
5: 10 pF
6: 30 pf

Frequency

The ordering codes for the VXC4 were changed in 2016. If you had ordered a specific code based off this ordering method, it is still available for purchase under the old code however no new part numbers will be created using this system.

Due to the change in the 8th character from numeric to alphabetic, there is no opportunity for overlap between the two ordering methods.

Contact Information

USA:
100 Watts Street
Mt Holly Springs, PA 17065
Tel: 1.717.486.3411
Fax: 1.717.486.5920

Europe:
Landstrasse
74924 Neckarbischofsheim
Germany
Tel: +49 (0) 7268.801.0
Fax: +49 (0) 7268.801.281