NHD-3.5-320240MF-ASXV#

TFT (Thin-Film-Transistor) Color Liquid Crystal Display Module

NHD-	Newhaven Display
3.5-	3.5” Diagonal
320240-	320xRGBx240 Pixels
MF-	Model
A-	Built-in Driver / No Controller
S-	High Brightness, White LED Backlight
X-	TFT
V-	MVA, Wide Temperature
#	**RoHS Compliant**

Newhaven Display International, Inc.

2661 Galvin Ct.

Elgin IL, 60124

Ph: 847-844-8795 Fax: 847-844-8796

www.newhavendisplay.com

nhtech@newhavendisplay.com nhsales@newhavendisplay.com

Document Revision History

Revision	Date	Description	Changed by
0	4/29/16	Initial Release	SB
1	6/30/16	Added Chromaticity	SB
2	9/23/16	Updated I_{LED}, I_{DD}, and Chromaticity Values	SB
3	6/19/19	Backlight Characteristics & Supply Current Updated	SB
4	6/30/20	Revised Note on Manual Register Configuration	AS

Functions and Features

- **320xRGBx240 resolution**
- **LED backlight**
- **3.3V power supply**
- **24-bit Parallel digital RGB interface (6.4MHz)**
- **Premium high brightness display**

SYMBOL	REVISION	DATE

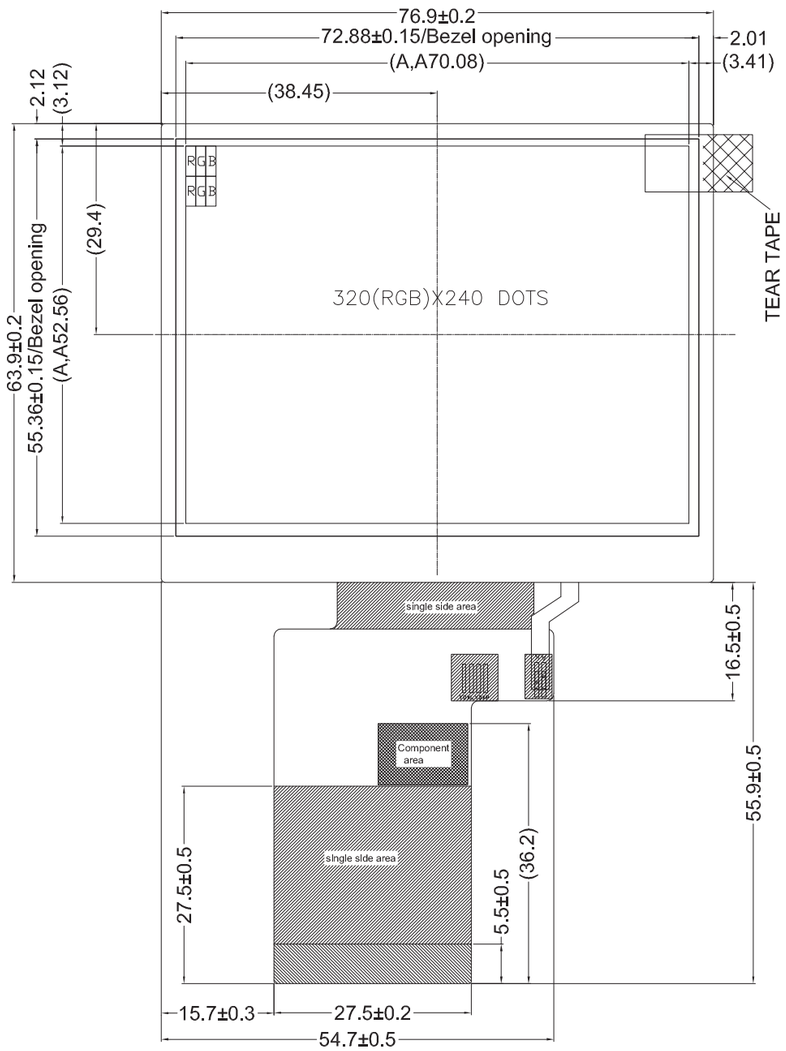

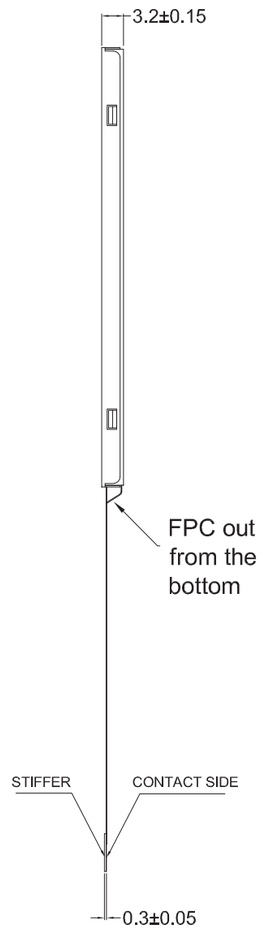

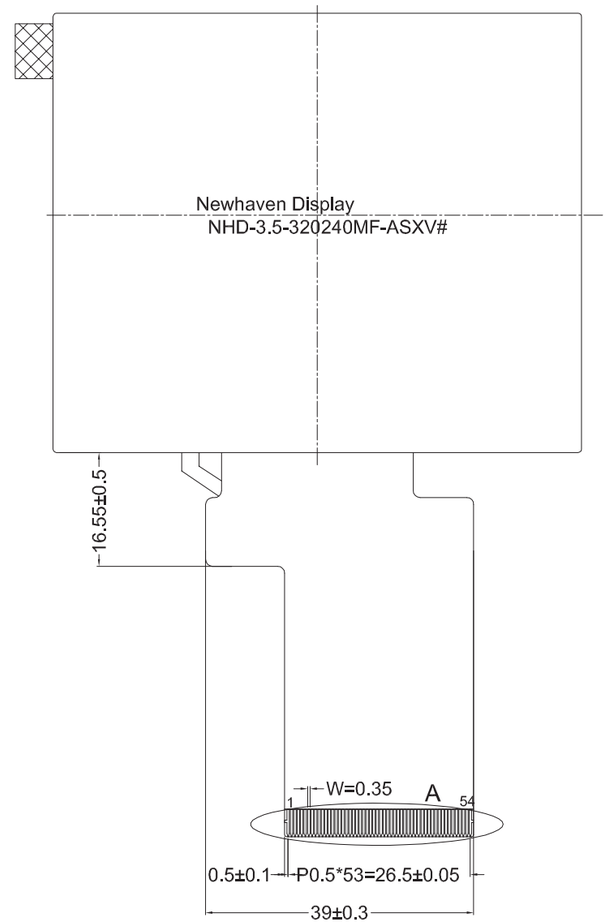

Pin No.	Symbol
1	LED_K
2	LED_K
3	LED_A
4	LED_A
5	NC
6	NC
7	NC
8	RSTB
9	SPENB
10	SPCK
11	SPDA
12-19	B0-B7
20-27	G0-G7
28-35	R0-R7
36	HSD
37	VSD
38	CLKIN
39	NC
40	NC
41	VDD
42	VDD
43	NC
44	NC
45	NC
46	NC
47	NC
48	NC
49	NC
50	NC
51	NC
52	DEN
53	GND
54	GND

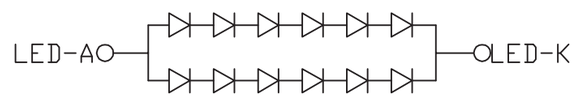

NOTES:

1. Display Size: 3.5” TFT
2. Viewing Direction: Full View
3. Display Mode: Transmissive / Normally White / Anti-Glare
4. Driver IC: NV3035C
5. Power Supply Voltage: 3.3 V
6.. Backlight: White LED / 19.2 V (Typ) / 40 mA
7. Brightness: 800 cd/m² (Typ)

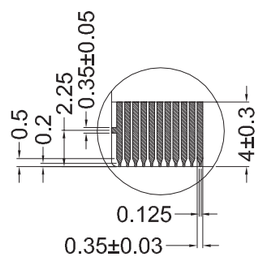

DETAIL:A

STANDARD TOLERANCE: (UNLESS OTHERWISE SPECIFIED)
LINEAR: ±0.3mm

UNLESS OTHERWISE SPECIFIED:
- DIMENSIONS ARE IN MILLIMETERS
- THIRD ANGLE PROJECTION

NEWHAVEN DISPLAY INTERNATIONAL

DRAWING/PART NUMBER: NHD-3.5-320240MF-ASXV#		REVISION: 1.0
DRAWN BY: S. Baxi	APPROVED BY: S. Baxi	SIZE: A3
DRAWN DATE: 6/19/19	APPROVED DATE: 6/19/19	SCALE: NS
DO NOT SCALE DRAWING		SHEET 1 OF 1

THIS DRAWING IS SOLELY THE PROPERTY OF NEWHAVEN DISPLAY INTERNATIONAL, INC. THE INFORMATION IT CONTAINS IS NOT TO BE DISCLOSED, REPRODUCED OR COPIED IN WHOLE OR PART WITHOUT WRITTEN APPROVAL FROM NEWHAVEN DISPLAY.

Pin Description

Pin No.	Symbol	External Connection	Function Description
1	LED_K	Power Supply	Backlight Cathode (Ground)
2	LED_K	Power Supply	Backlight Cathode (Ground)
3	LED_A	Power Supply	Backlight Anode (40mA @ 19.2V)
4	LED_A	Power Supply	Backlight Anode (40mA @ 19.2V)
5	NC	-	No Connect
6	NC	-	No Connect
7	NC	-	No Connect
8	RSTB	MPU	Active LOW Reset signal
9	SPENB	MPU	Active LOW Serial Chip Select signal
10	SPCK	MPU	Serial Clock signal
11	SPDA	MPU	Serial Data signal
12-19	B0-B7	MPU	Blue Data signals
20-27	G0-G7	MPU	Green Data signals
28-35	R0-R7	MPU	Red Data signals
36	HSD	MPU	Horizontal (Line) Sync signal
37	VSD	MPU	Vertical (Frame) Sync signal
38	CLKIN	MPU	Dot Clock signal
39	NC	-	No Connect
40	NC	-	No Connect
41	VDD	Power Supply	Supply Voltage for LCD and logic (3.3V)
42	VDD	Power Supply	Supply Voltage for LCD and logic (3.3V)
43	NC	-	No Connect
44	NC	-	No Connect
45	NC	-	No Connect
46	NC	-	No Connect
47	NC	-	No Connect
48	NC	-	No Connect
49	NC	-	No Connect
50	NC	-	No Connect
51	NC	-	No Connect
52	DEN	-	Data Enable signal (No Connect)
53	GND	Power Supply	Ground
54	GND	Power Supply	Ground

Recommended connector: 54pin, 0.5mm pitch, FFC connector. Molex P/N 51296-5494

Electrical Characteristics

Item	Symbol	Condition	Min.	Typ.	Max.	Unit
Operating Temperature Range	T_{OP}	Absolute Max	-20	-	+70	^oC
Storage Temperature Range	T_{ST}	Absolute Max	-30	-	+80	^oC
Digital Supply Voltage	V_{DD}	-	3.0	3.3	3.6	V
Supply Current	I_{DD}	V_{DD}=3.3V	5	10	15	mA
"H" Level input	V_{IH}	-	0.8*V_{DD}	-	V_{DD}	V
"L" Level input	V_{IL}	-	V_{SS}	-	0.2*V_{DD}	V
"H" Level output	V_{OH}	-	V_{DD}-0.4	-	V_{DD}	V
"L" Level output	V_{OL}	-	V_{SS}	-	V_{SS}+0.4	V
Backlight Supply Current	I_{LED}	-	30	40	50	mA
Backlight Supply Voltage	V_{LED}	I_{LED} = 40 mA	17.4	19.2	19.8	V
Backlight Lifetime*	-	T_{OP} = 25° C	20,000	50,000	-	Hrs.

*Backlight lifetime is rated as Hours until **half-brightness**, under normal operating conditions. The LED of the backlight is driven by current drain; drive voltage is for reference only. Drive voltage must be selected to ensure backlight current drain is below MAX level stated

Optical Characteristics

Item		Symbol	Condition	Min.	Typ.	Max.	Unit
Optimal Viewing Angles	Top	φY+	CR ≥ 10	-	70	-	°
	Bottom	φY-		-	70	-	°
	Left	θX-		-	70	-	°
	Right	θX+		-	70	-	°
Contrast Ratio		CR	-	200	350	-	-
Luminance		L_V	I_{LED} = 40 mA	640	800	-	cd/m^2
Response Time	Rise	T_R	T_{OP} = 25° C	-	25	40	ms
	Fall	T_F		-	25	40	ms
Chromaticity	Red	X_R	-	0.554	0.604	0.654	-
		Y_R	-	0.298	0.345	0.395	-
	Green	X_G	-	0.263	0.313	0.363	-
		Y_G	-	0.552	0.602	0.652	-
	Blue	X_B	-	0.094	0.144	0.194	-
		Y_G	-	0.056	0.106	0.156	-
	White	X_W	-	0.229	0.279	0.329	-
		Y_W	-	0.271	0.321	0.371	-

Driver Information

Built-in NV3035C driver. No controller.
Please download specification at http://www.newhavendisplay.com/app_notes/NV3035C.pdf

NOTE: Control registers accessible via the display's 3-wire SPI interface are used to set optimal functionality of the driver IC and TFT panel during manufacturing of the display. These control registers are not intended for use during normal operation of the display. Changing these register values may result in undesired visual artifacts and improper functionality of the display.

Timing Characteristics

Parameter	Symbol	Min.	Typ.	Max.	Unit	Conditions
System Operation Timing						
VDD power source slew time	T_{POR}			1000	us	From 0V to 90% VDD
RSTB active pulse width	T_{RSTB}	40			us	VDD=3.3V
Input Output Timing						
CLKIN clock time	Tclk	-		35.7	ns	Please refer to timing table(P25)
HSD to CLKIN	Thc	-	-	1	CLKIN	
HSD width	Thwh	1	-	-	CLKIN	
VSD width	Tvwh	1	-	-	Th	
HSD period time	Th	60	63.56	67	us	
VSD setup time	Tvst	12	-	-	ns	
VSD hold time	Tvhd	12	-	-	ns	
HSD setup time	Thst	12	-	-	ns	
HSD hold time	Thhd	12	-	-	ns	
Data set-up time	Tdsu	12	-	-	ns	DIN[23:0] to CLKIN
Data hold time	Tdhd	12	-	-	ns	DIN[23:0] to CLKIN
DEN setup time	Tesd	12	-		ns	DEN to CLKIN
Time that VSD to 1st line data input	Tvs	2	13	127	Th	@CIR601/8bit RGB HV mode Control by HDLY[6:0] setting Tvs=HDLY[6:0]
Time that CCIR_V to 1st line data input	Tvs	12	20	28	Th	@CCIR656 NTSC mode Control by HDLY[6:0] setting Tvs=HDLY[6:0]
Time that CCIR_V to 1st line data input	Tvs	17	25	33	Th	@CCIR656 PAL mode Control by HDLY[6:0] setting Tvs=HDLY[6:0]
Time that VSD to 1st line data input	Tvs	2	13	127	Th	@24bit RGB HV mode Control by HDLY[6:0] setting Tvs=HDLY[6:0]
Source output stable time 1	Tst	-	25	30	us	96% final, CL=30pF, RL=2K
Gate output stable time	Tgst	-	500	1000	ns	96% final, CL=40pF
VCOMOUT output stable time	Tcst	-	4	8	us	96% final, CL=33nF, RL=100ohm
3-wire serial communication AC timing						
Serial clock	Tspck	320	-	-	ns	
SPCK pulse duty	Tscdut	40	50	60	%	Tckh/Tspck
Serial data setup time	Tisu	120	-	-	ns	
Serial data hold time	Tihd	120	-	-	ns	
Serial clock high/low	Tssw	120	-	-	ns	
Chip select distinguish	Tcd	1	-	-	us	
SPENA to VSD	Tcv	1	-	-	us	
SPENB input setup time	Teck	150	-	-	Ns	
SPENB input hold time	Tcke	150	-	-	ns	

Parameter	Symbol	Min.	Typ.	Max.	Unit	Conditions
CLKIN frequency	Fclk	6.1	6.4	8.0	MHz	VDD=3.0~3.6V
CLKIN cycle time	Tclk	125	156	164	ns	
CLKIN pulse duty	Tcwh	40	50	60	%	Tclk
Time that HSD to 1st data input(NTSC)	Ths	40	70	255	CLKIN	DDLY=70,Offset=0(fixed)

Input Data Format

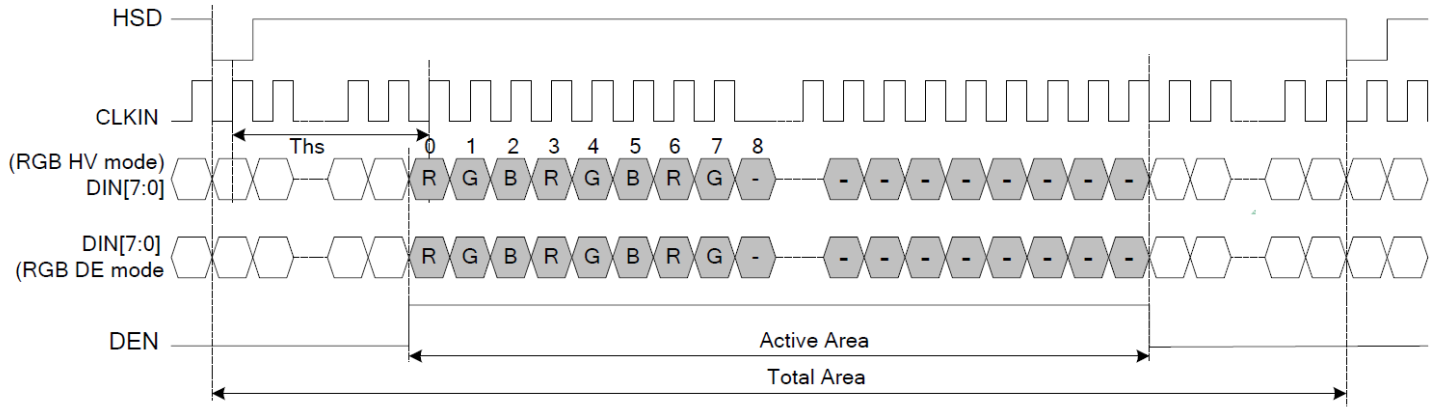

Clock and Data Input Timing Diagram

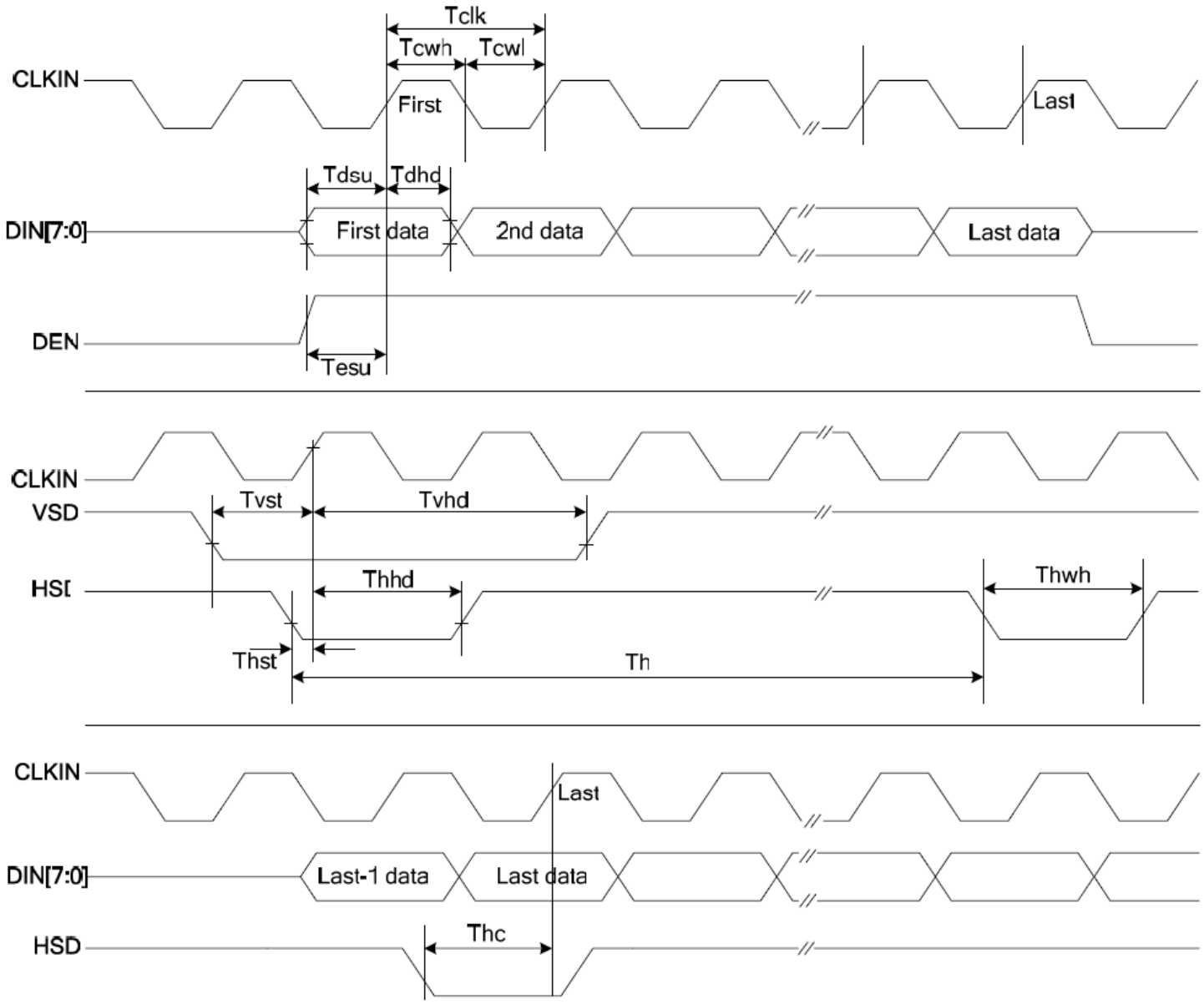

3-wire Timing Diagram

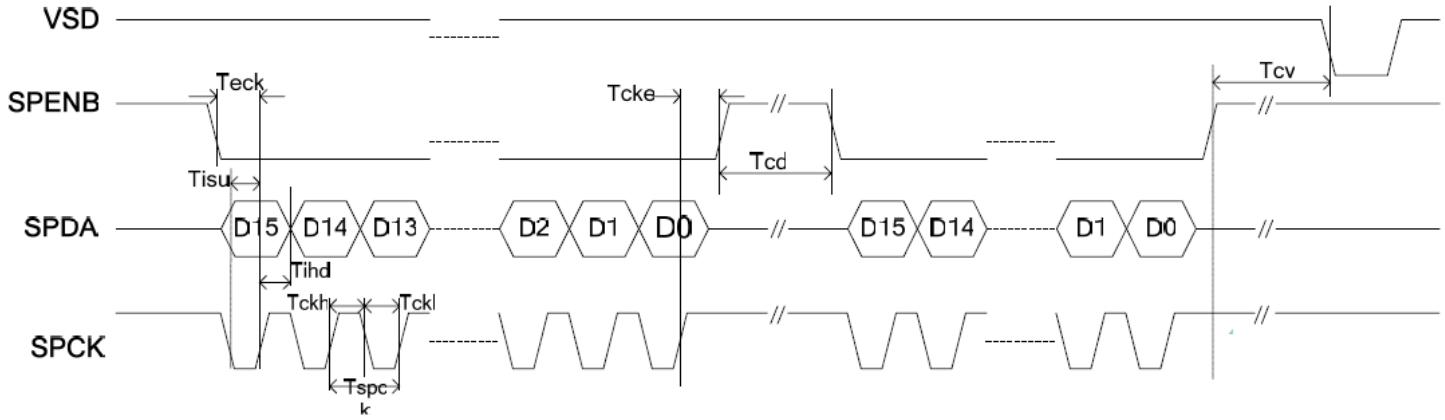

Input Data Timing

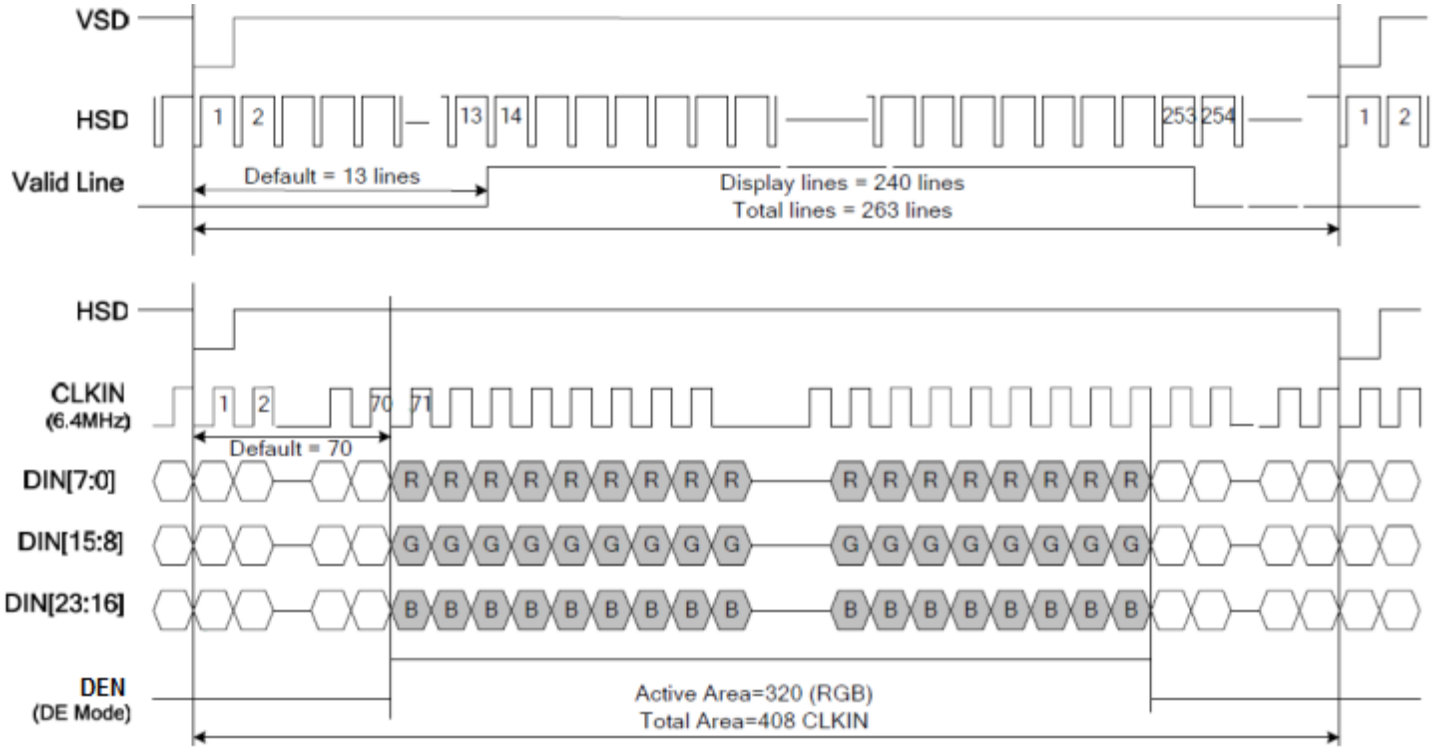

Quality Information

Test Item	Content of Test	Test Condition	Note
High Temperature storage	Endurance test applying the high storage temperature for a long time.	+70°C , 240hrs	2
Low Temperature storage	Endurance test applying the low storage temperature for a long time.	-30°C , 240hrs	1,2
High Temperature Operation	Endurance test applying the electric stress (voltage & current) and the high thermal stress for a long time.	+60°C , 240hrs	2
Low Temperature Operation	Endurance test applying the electric stress (voltage & current) and the low thermal stress for a long time.	-20°C , 240hrs	1,2
High Temperature / Humidity Operation	Endurance test applying the electric stress (voltage & current) and the high thermal with high humidity stress for a long time.	+60°C , 90% RH , 160hrs	1,2
Thermal Shock resistance	Endurance test applying the electric stress (voltage & current) during a cycle of low and high thermal stress.	-30°C,30min -> 25°C,5min -> 80°C,30min = 1 cycle 100 cycles	
Vibration test	Endurance test applying vibration to simulate transportation and use.	10-55Hz , 15mm amplitude. 60 sec in each of 3 directions X,Y,Z For 15 minutes	3
Static electricity test	Endurance test applying electric static discharge.	VS=4KV, RS=330kΩ, CS=150pF Five times	

Note 1: No condensation to be observed.
Note 2: Conducted after 4 hours of storage at 25°C, 0%RH.
Note 3: Test performed on product itself, not inside a container.

Precautions for using LCDs/LCMs

See Precautions at www.newhavendisplay.com/specs/precautions.pdf

Warranty Information and Terms & Conditions

http://www.newhavendisplay.com/index.php?main_page=terms