Features/Benefits

- *SPDT NC-NO function*
- *Silicone actuator*
- *J or G terminations*
- *Tape & reel*
- *IP67*

Typical Applications

- *Automotive*
- *Medical equipment*
- *Industrial electronics*

Type	Force (N)	Operating Life (operations)	Travel (mm)
KSC441J DCT 70SH LFS	4.75 +/-1.25	300,000	0.85+0.35/-0.25
KSC441G DCT 70SH LFS	4.75 +/-1.25	300,000	0.85+0.35/-0.25

Packaging

In reels of 1,000 pieces.
Dimensions of reels according to EIA RS481 or IEC 2863.
External diameter 330 ± 2 mm

PCB Layout

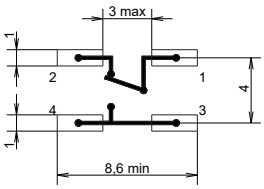

LAYOUT - PAD
SCALE : 5

1 - 2 NC
1 - 3 NO

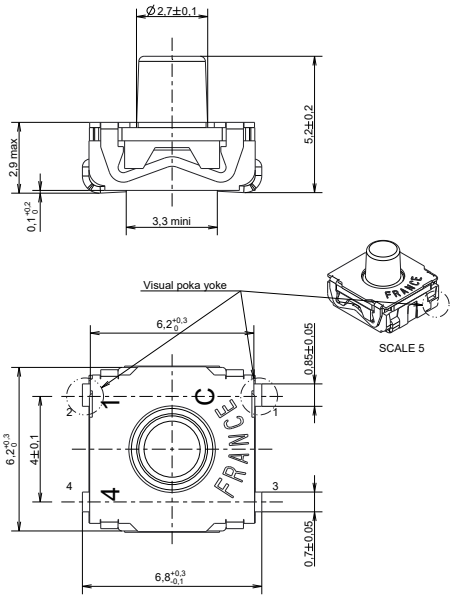

How To Order

Our easy build-a-switch concept allows you to mix and match options to create the switch you need. To order, select desired option from each category and place it in the appropriate box.
For any part number different from those listed above, please consult your local representative.

K S C — 4 — 4 — 1 — [ ] — DCT — 70SH — L F S

Force
4 4.75 N

Contact Material
1 Silver

Termination
J J bend
G Gull wing

Actuator / Tactile
70SH Silicon 70SH

LFS Lead free compatible, silver plated

First Angle Projection

Dimensions are shown: mm
Specifications and dimensions subject to change