THIS DRAWING IS UNPUBLISHED. RELEASED FOR PUBLICATION 20
© COPYRIGHT 20 BY – ALL RIGHTS RESERVED.

LOC	DIST

REVISIONS

P	LTR	DESCRIPTION	DATE	DWN	APVD
	A	FIRST VERSION	23NOV2015	G.F	S.M

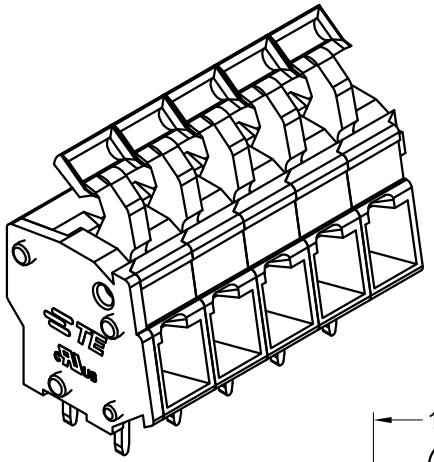

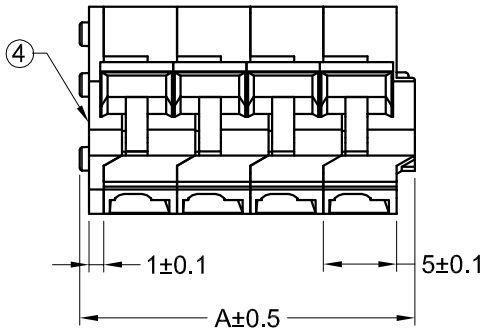

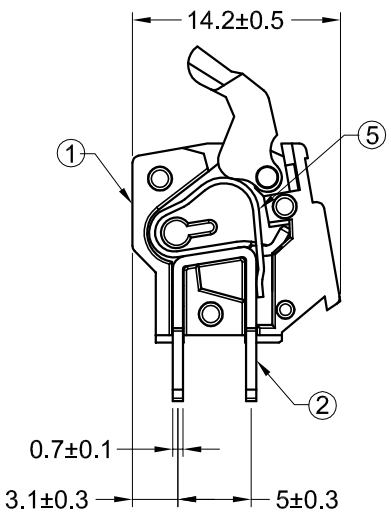

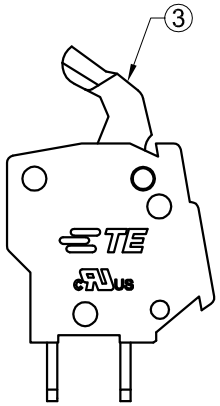

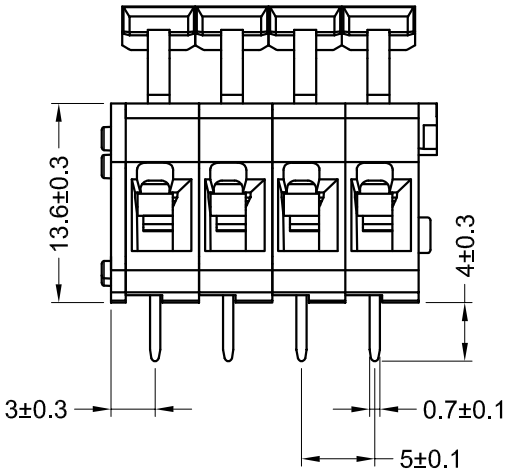

⑤	SPRING
④	COVER
③	LEVER
②	CONTACT
①	HOUSING

COLOR	DIM A	NO. OF POSITIONS	PART NO
GRAY	42.90	8 POSN	2834082-7
	37.90	7 POSN	2834082-6
	32.90	6 POSN	2834082-5
	27.90	5 POSN	2834082-4
	22.90	4 POSN	2834082-3
	17.90	3 POSN	2834082-2
	12.90	2 POSN	2834082-1

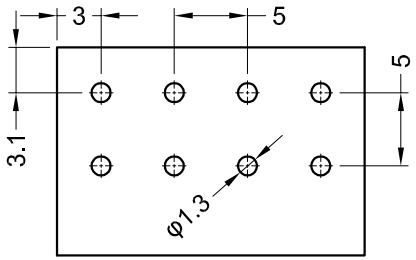

PCB Layout

NOTES :

1. MATERIALS AND FINISH:
   – HOUSING: PA66
   – CONTACTS: BRASS, FINISH: TIN OVER NICKEL UNDERPLATE
2. MUST COMPLY WITH DIRECTIVE 2002/95/EC (RoHS)
3. WIRE TYPES AND SIZES ACCEPTED
   WIRE RANGE: 12AWG~28AWG.
   STRIP LENGTH: 5~6mm
4. PACKAGED IN TRAY.
5. CURRENT RATING: 20Amp AC300V.
6. OPERATION TEMPERATURE: −40°C TO +105°C
7. THIS PART No. IS THE SAME STRUCTURE AS THE SERIES: 2834082
   THE DATASHEET AND MORE DETAILS PLEASE FOLLOW THE SERIES: 2834082

THIS DRAWING IS A CONTROLLED DOCUMENT.

DIMENSIONS: mm

TOLERANCES UNLESS OTHERWISE SPECIFIED:
0 PLC ±0.20
1 PLC ±0.15
2 PLC ±0.1
3 PLC ±
4 PLC ±
ANGLES ±3°

MATERIAL 1
FINISH 1

DWN GEORGE FU 23NOV2015
CHK SHI MING 23NOV2015
APVD XU XIANG 23NOV2015
PRODUCT SPEC 108-137148
APPLICATION SPEC 114-137148
WEIGHT –

TE Connectivity

NAME 5.00mm Horizontal Entry Screwless Connector

SIZE A2 | CAGE CODE 00779 | DRAWING NO C-2834082 | RESTRICTED TO –

CUSTOMER DRAWING | SCALE 1:1 | SHEET 1 OF 1 | REV A

1471-9 (3/11)