LED04 POD Schematic (68 QFN)

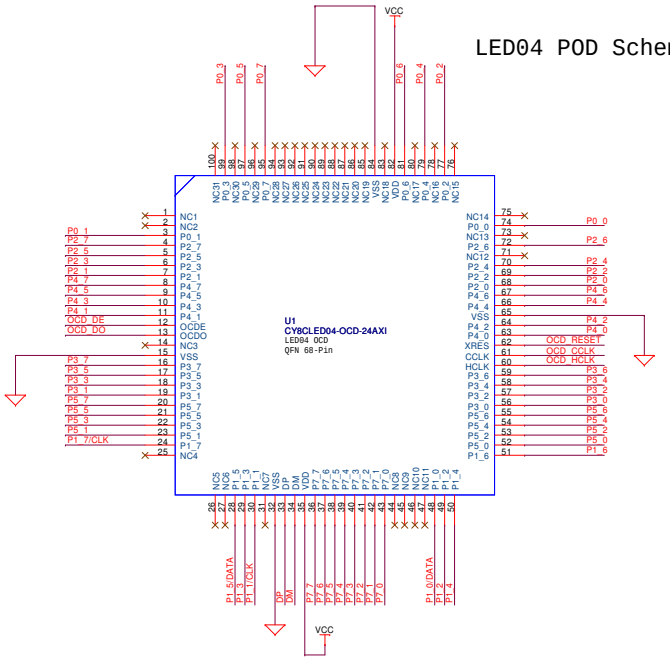

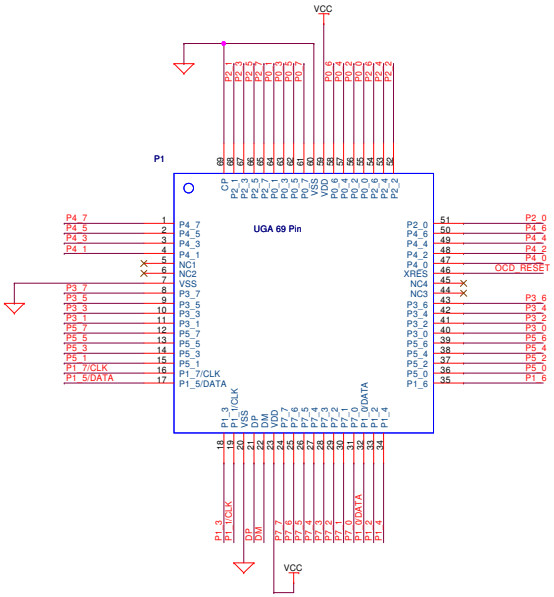

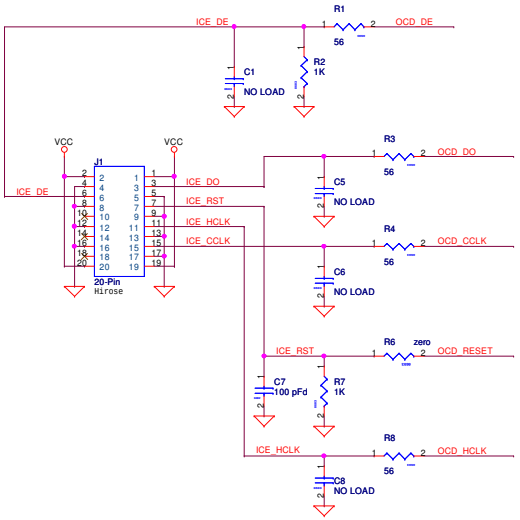

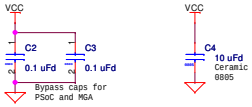

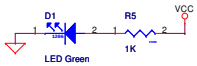

Revision History

Rev 0.1 Original

Rev 0.2 Changed OCD part from a 68-QFN to a 100-TQFP

PCB: PDC-9601**
PCA: 121-60101 **

CYPRESS SEMICONDUCTOR © 2005		
Title: LED04 68 QFN POD		
Size: C	Document Number: REF-xxxxx	Rev: 0.2
Date: Monday, January 12, 2009	Sheet 1 of 1	

[+] Feedback