THIS DRAWING IS A CONTROLLED DOCUMENT

DRAWING NO AU34605

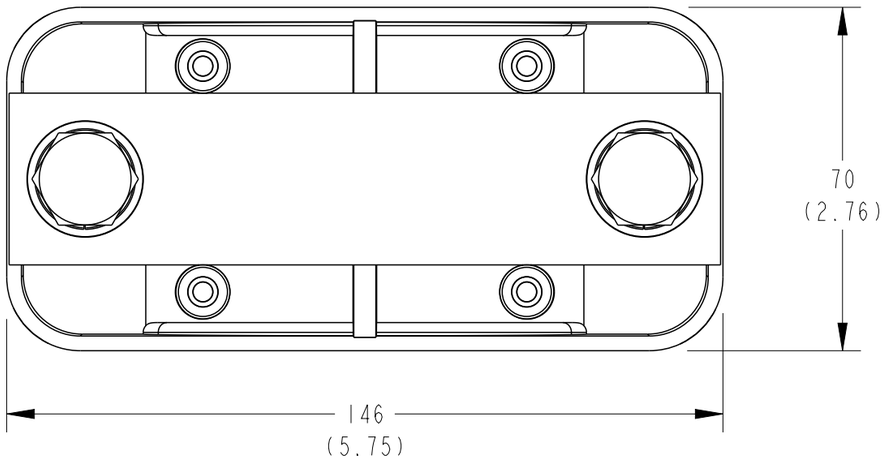

PART NO.	CATALOGUE NO.
BM9039-000	CC60-70-FM-MI2
BM9040-000	CC68-81-FM-MI2

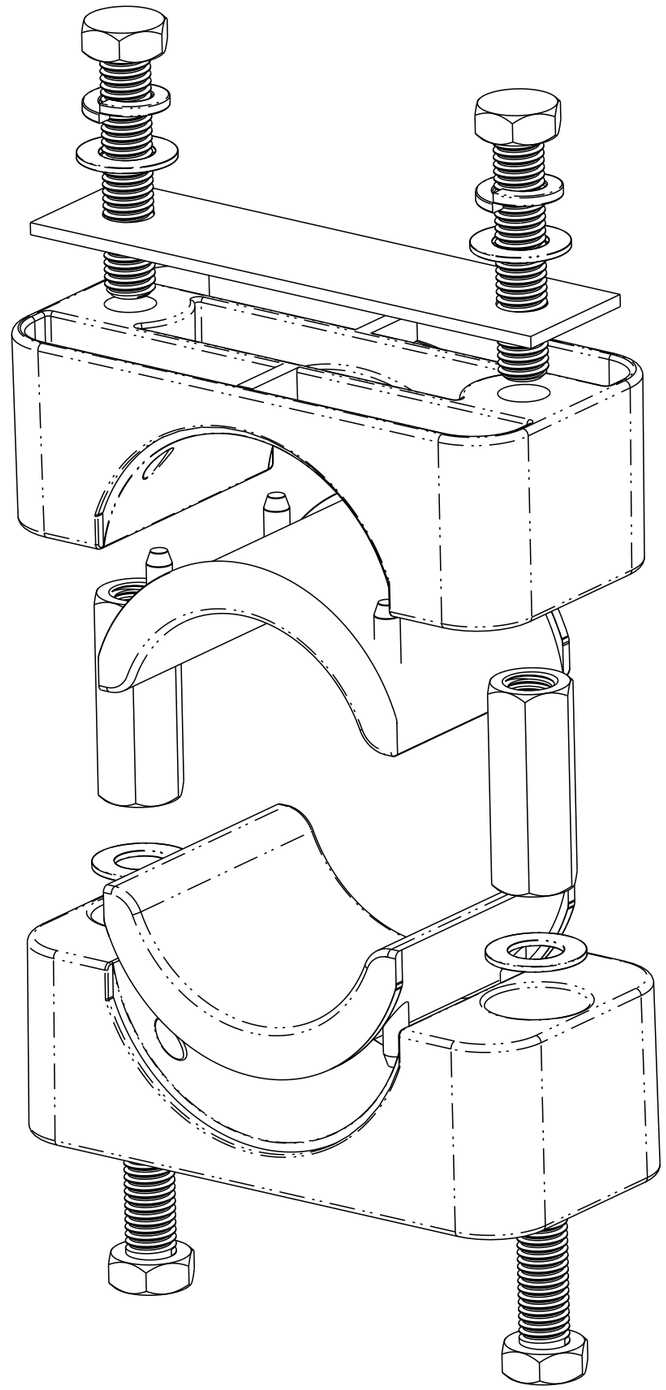

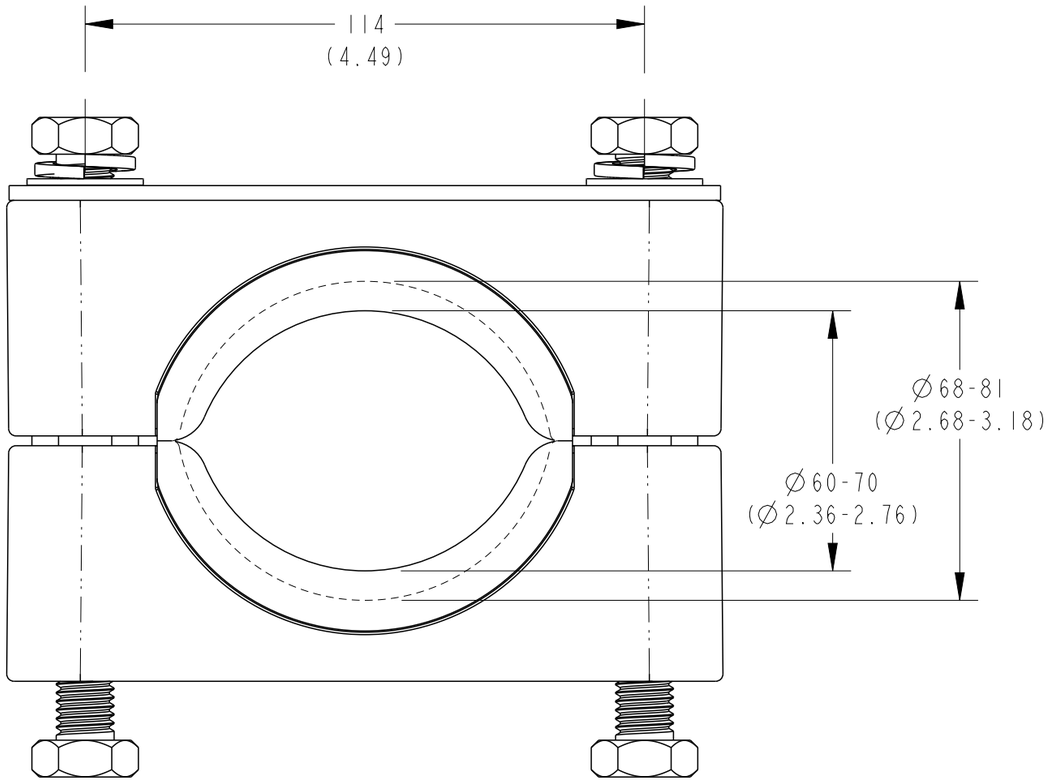

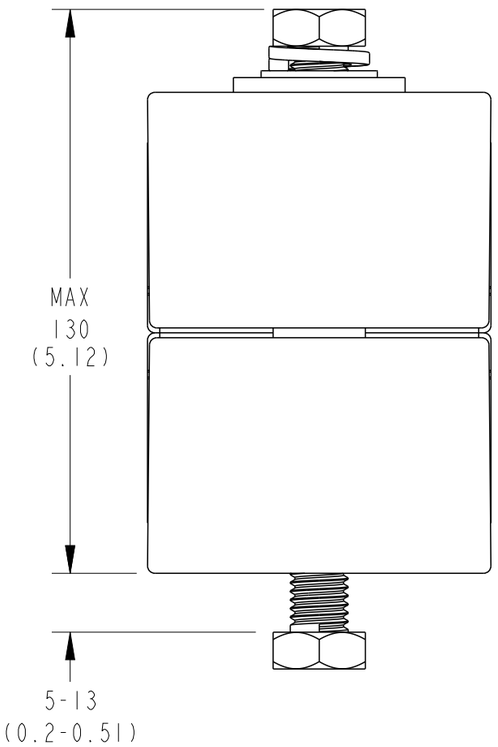

THIS INFORMATION IS CONFIDENTIAL AND PROPRIETARY TO TE CONNECTIVITY CORPORATION AND ITS WORLDWIDE SUBSIDIARIES AND AFFILIATES. IT MAY NOT BE DISCLOSED TO ANYONE, OTHER THAN TE CONNECTIVITY PERSONNEL, WITHOUT WRITTEN AUTHORIZATION FROM TE CONNECTIVITY CORPORATION, AUSTRALIA.

	POS	REV	REVISION RECORD	DATE	DWN	APVD
LOC						
DIST	—	1	NEW RELEASE	09-09-2015	RN	AT

IMPLIED NOTES
BURRS AND SHARP EDGES REMOVED
SCREW THREADS ARE TO AS 1275
DO NOT WORK TO DIMS MARKED REF
SURFACE FINISH 6.3 U.N.O.
DIMS ARE IN mm. DO NOT SCALE

IMPLIED TOLERANCES
HOLE DIA AND LOCATIONS..±0.5mm.
DIMENSIONS UP TO 30mm...±1.5mm.
DIMENSIONS OVER 30mm...±5%.
UP TO A MAX OF.....±5mm.
ANGULAR DIMENSIONS.....±5°.

TCPN: REFER TABLE
PART Alias UTX/DUL: CC60-81-FM-MI2
Cat No: REFER TABLE

TITLE: CABLE CLEAT Ø60-70 AND Ø68-81 FLAT MOUT TYPE 5-13mm

DRAWN: RN | DATE: 09-09-2015
CHECKED: RN | APPROVED: AT

TE Connectivity
2/3 Corella Close
Berkeley Vale NSW 2261 Australia

MATERIAL DESC: -
MATERIAL NO: - | MATL SPEC/STD/DRG NO: - | PROCESS SPEC HEAT TREAT/PLATING NO

SIZE: A3 | PROJECTION: 3RD ANGLE | SCALE: 4:5 | DRAWING NO: AU34605 | SHEET 1 OF 1 | REV 1

Format: generic_ma3_au_rl.frm | Template: tec_generic_a3_metric_au_rl.drw | Dwg No from Pt Mod Fam Tbl: AU29480