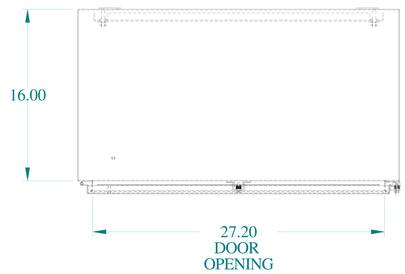

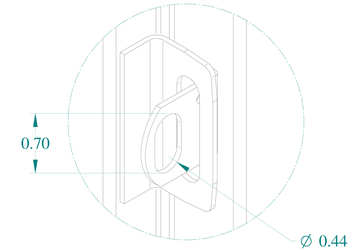

DETAIL Z

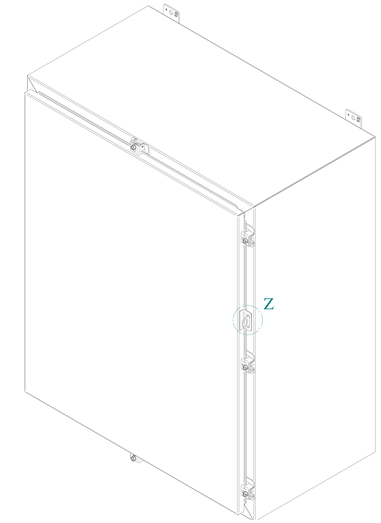

ISOMETRIC VIEWS

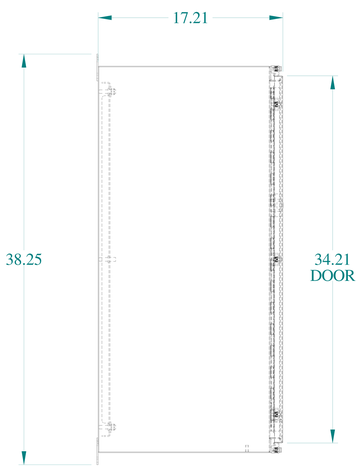

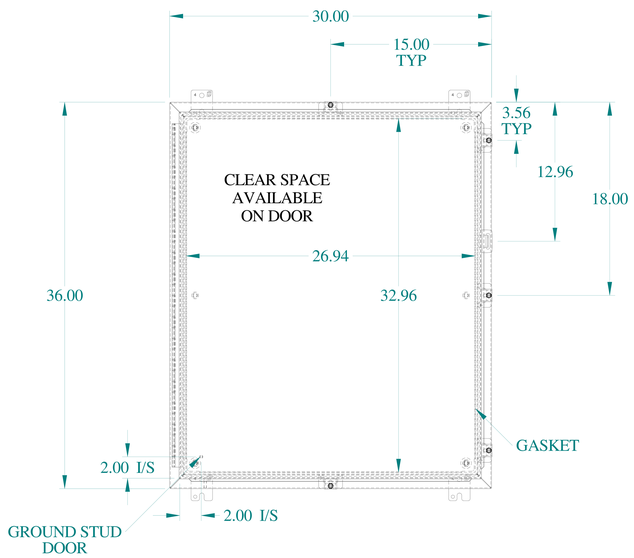

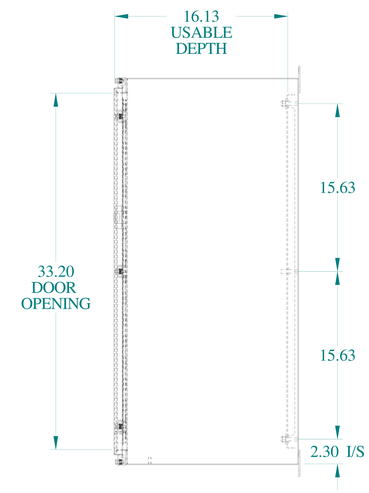

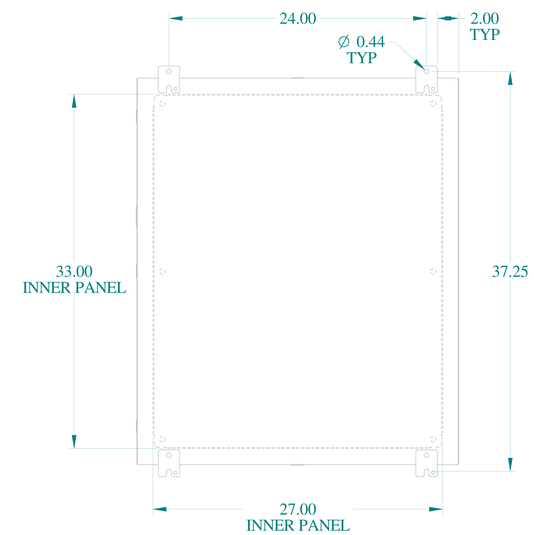

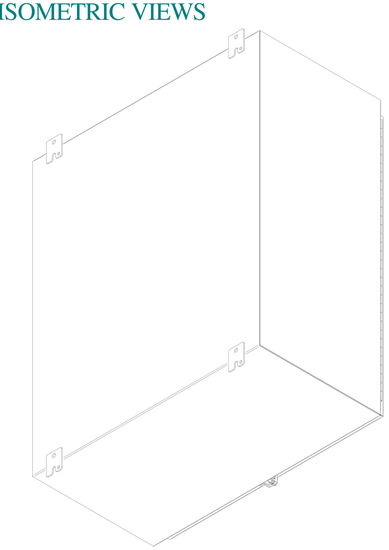

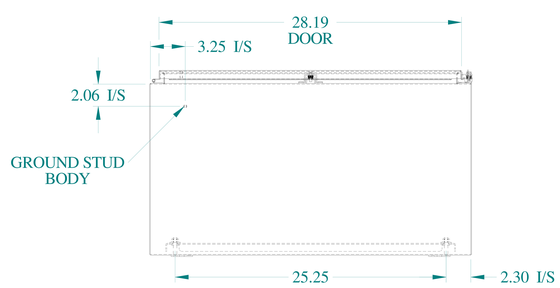

HAMMOND MANUFACTURING®

www.hammondmfg.com

Data subject to change without notice.

Part # : 1418N4SSM16	Date : Mar. 22, 2019

Link:www.hammfg.com/1418N4SSM16