THIS DRAWING IS UNPUBLISHED. RELEASED FOR PUBLICATION -.- .
© COPYRIGHT - BY TYCO ELECTRONICS CORPORATION. ALL RIGHTS RESERVED.

LOC	DIST
AD	25

REVISIONS

P	LTR	DESCRIPTION	DATE	DWN	APVD
	01	REVISED PER ECO-08-013371	05JUN08	DH	DB

1. HOUSING MATERIAL: GLASS-FILLED POLYMER.
2. CONTACT MATERIAL: COPPER ALLOY.
3. PART NUMBER AND DATE CODE IN THIS APPROXIMATE AREA.
4. ACTION PIN POSTS REQUIRE 1.57[.062] MINIMUM THICK PC BOARD. RECOMMENDED PC BOARD DRILLED HOLES ARE Ø1.151±0.025[.0453±.0010] WITH 0.02-0.08[.001-.003] COPPER AND 0.008[.0003] MINIMUM TIN-LEAD PLATING. FINISHED HOLES AFTER PLATING Ø1.02 ±0.08[.040±.003].
5. CONTACT FINISH: DIN 41612 CLASS 2 IN CONTACT AREA. TIN PLATE ON POSTS.
6. TAIL LENGTH AFTER SEATED IN PC BOARD.
7. CONTACT POINT AFTER SEATED IN PC BOARD.
8. MARKING ON THIS SIDE.

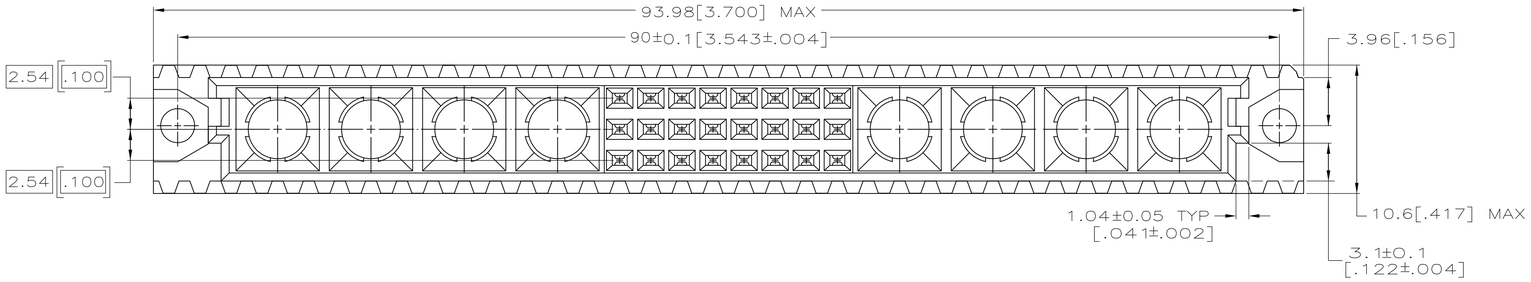

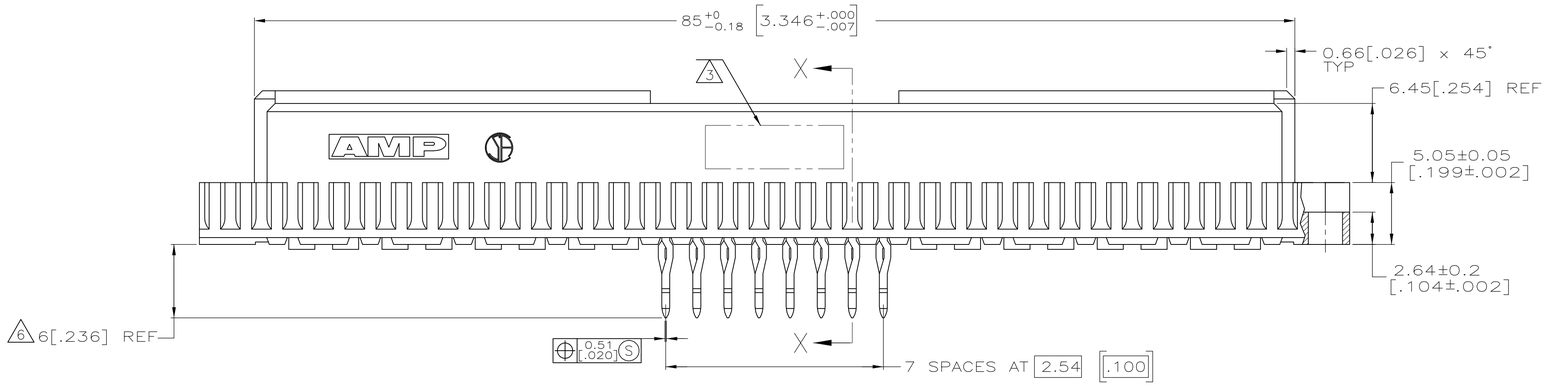

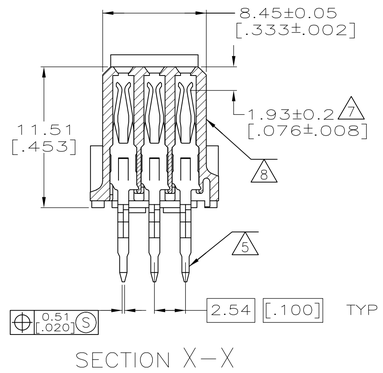

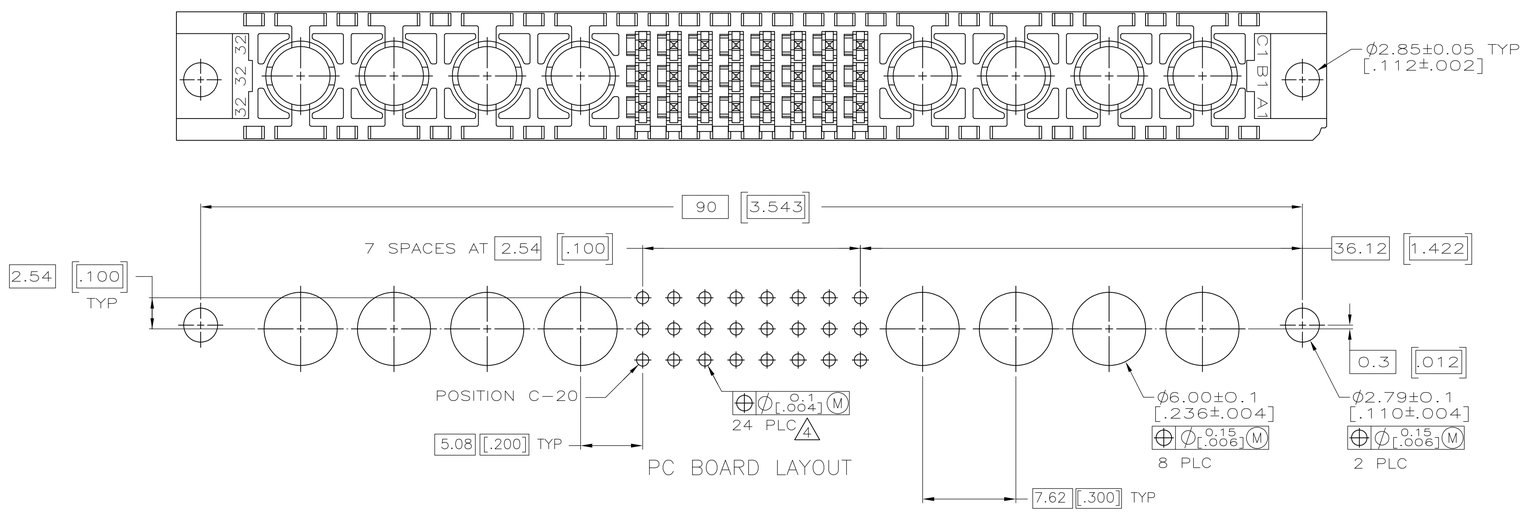

PC BOARD LAYOUT

5148384-5
PART NUMBER

THIS DRAWING IS A CONTROLLED DOCUMENT.

DIMENSIONS: mm [INCHES]

TOLERANCES UNLESS OTHERWISE SPECIFIED:
0 PLC ± –
1 PLC ± –
2 PLC ± 0.13[.005]
3 PLC ± –
4 PLC ± –
ANGLES ± –

MATERIAL 1 2
FINISH 5

DWN J. POLIGNONE 13APR05
CHK A. SHARPE 13APR05
APVD A. SHARPE 13APR05
PRODUCT SPEC —
APPLICATION SPEC —
WEIGHT —

Tyco Electronics
Tyco Electronics Corporation
Harrisburg, PA 17105-3608

NAME
ASSEMBLY, RECEPTACLE, TYPE M, EUROCARD, 24+8, PRESS-FIT, 6.00[.236]

SIZE	CAGE CODE	DRAWING NO	RESTRICTED TO
A1	00779	C-5148384	—

CUSTOMER DRAWING
SCALE 4:1 SHEET 1 OF 1 REV 01