RoHS 2011/65/EU REACH compliant Conflict minerals free

GEYER quartz technology

Quartz Crystal

SMD-version

model	KX – 5
frequency	30,0 MHz
mode	fundamental
operating temperature	-20° ~ +70°C
frequency tolerance at +25°C	± 30 ppm
temperature tolerance -20° ~ +70°C	± 30 ppm
load capacitance C_L	8 pF
series resonance R1 max.	100 Ohm
aging at +25°C (first year) max.	± 2 ppm
shunt capacitance C_0 max.	3,5 pF
drive level max.	150 µW
contents of reel	1000 pcs.
part no.	12.85541

Dimensions (mm):

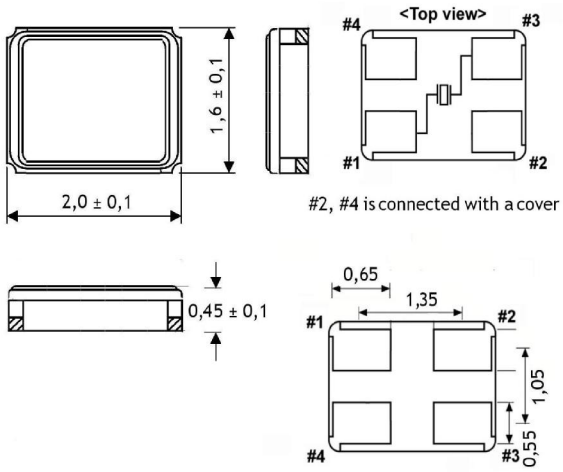

Reflow soldering condition:

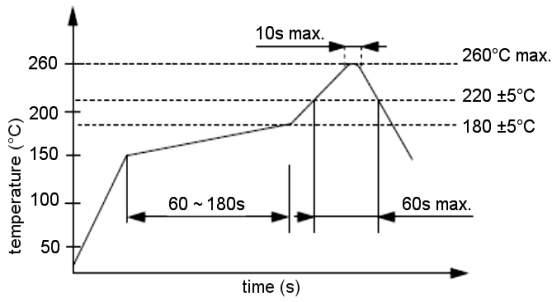

Suggested soldering pad:

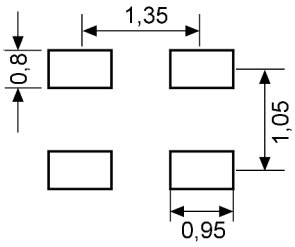

Tape specification:

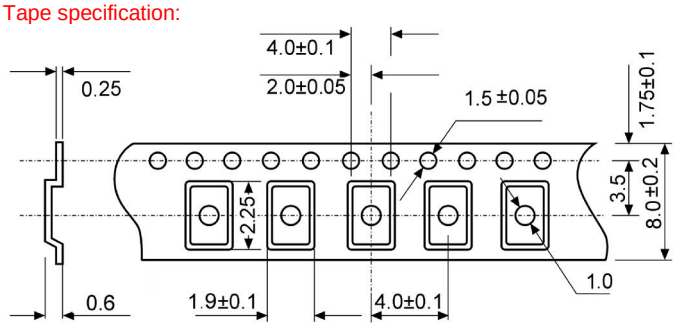

reel diameter 178 mm

GEYER ELECTRONIC e.K. Lochhamer Schlag 5 82166 Gräfelfing/München
Tel. +49 89 546868-0 quartz@geyer-electronic.de www.geyer-electronic.de