MATERIAL NO.	ENGINEERING NO.	DESCRIPTION	PRODUCT LENGTH
1301460016	14W07A163	14W07 W/25 16-3SO 15W07	25 FT +12.0/-0.0 IN

NON-NEMA; 15A/125V 10A/250V; 3-POLE/3-WIRE

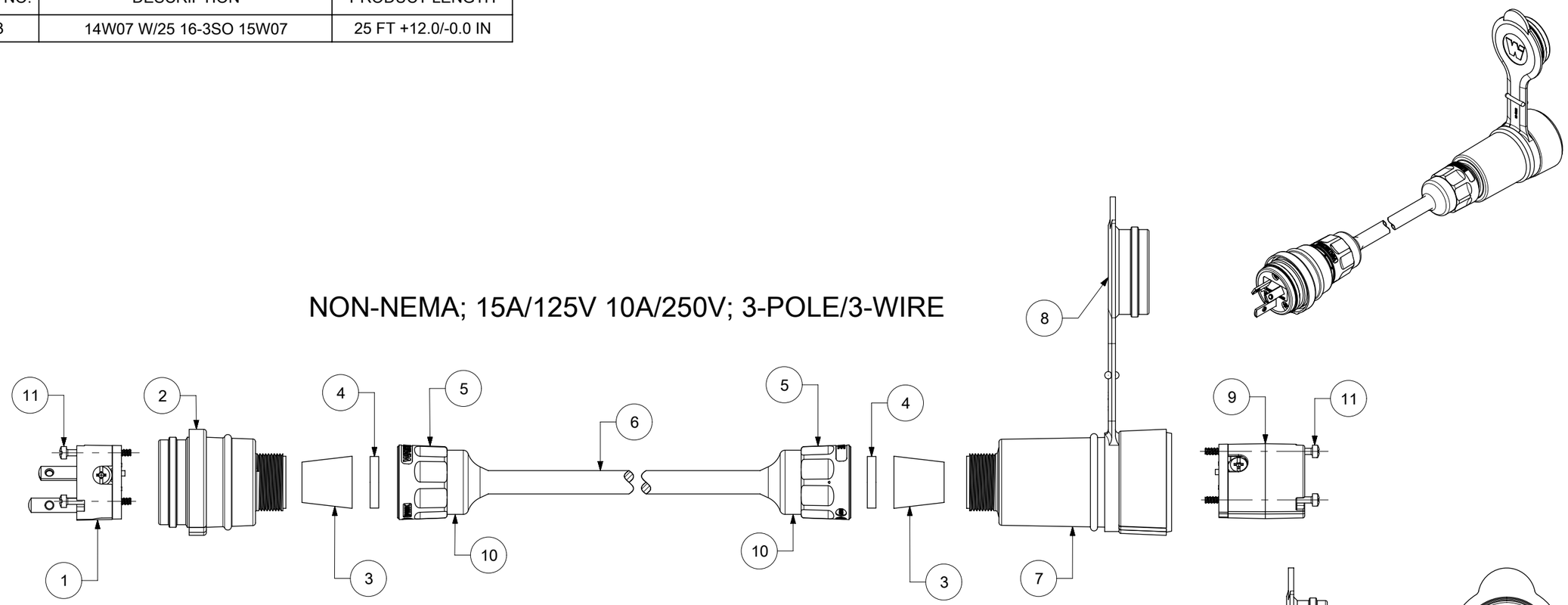

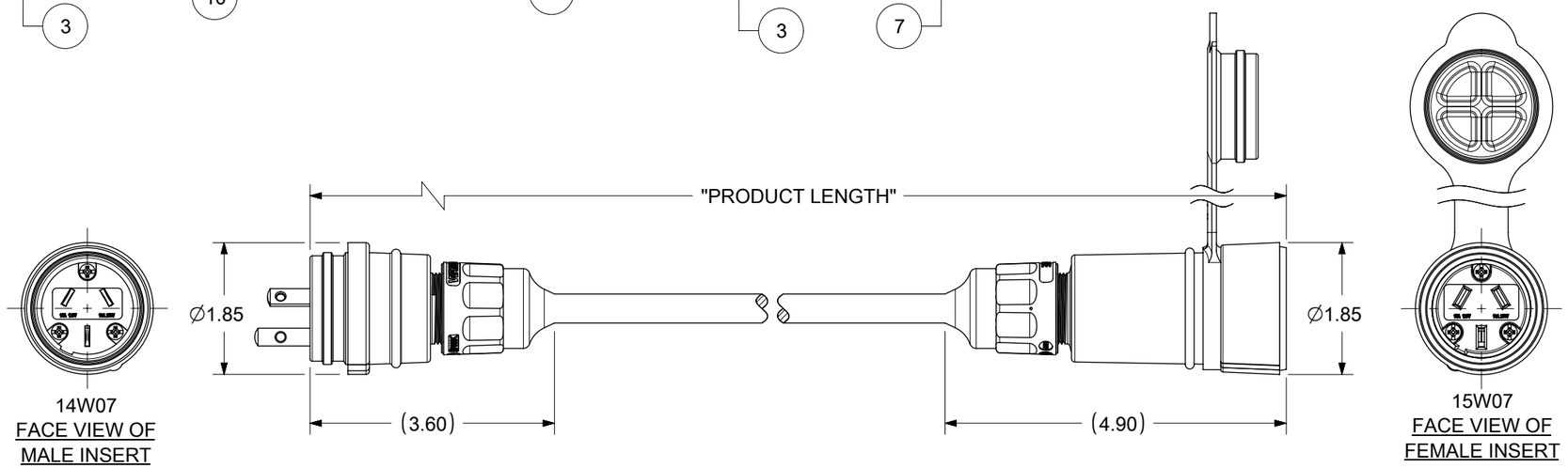

ITEM NO.	DESCRIPTION	MATERIAL	QTY.
1	MALE INSERT ASSY.	NYLON, POLYCARBONATE, BRASS PLATING - NICKEL OR ZINC	1
2	WATERTITE - MALE HUSK	SILICONE	1
3	GROMMET	RUBBER	2
4	FRICTION RING	NYLON	2
5	COMPRESSION NUT YELLOW	NYLON	2
6	YELLOW SOOW CORD	COPPER WIRE	1
7	WATERTITE - FEMALE HUSK	SILICONE	1
8	CLOSURE CAP YELLOW	SILICONE	1
9	FEMALE INSERT ASSY.	NYLON, POLYCARBONATE, BRASS PLATING - NICKEL OR ZINC	1
10	CABLE GLOVE	SILICONE	2
11	RETAINING SCREW	STAINLESS STEEL	6

DOCUMENT STATUS	P1	RELEASE DATE	2020/05/19 19:17:36

SYMBOLS
E = 0
E = 0
E = 0
S = 0
▼ = 0
C = 0
☒ = 0
■ = 0
▽ = 0

THIS DRAWING CONTAINS INFORMATION THAT IS PROPRIETARY TO MOLEX ELECTRONIC TECHNOLOGIES, LLC AND SHOULD NOT BE USED WITHOUT WRITTEN PERMISSION

DIMENSION UNITS	SCALE
INCH	NTS

GENERAL TOLERANCES (UNLESS SPECIFIED)

ANGULAR TOL	±	°
4 PLACES	±	
3 PLACES	±	
2 PLACES	±	
1 PLACE	±	
0 PLACES	±	

DRAFT WHERE APPLICABLE MUST REMAIN WITHIN DIMENSIONS

CURRENT REV DESC: NEW SALE DRAWING CREATED.

EC NO: 620468
DRWN: PPURSUTANDEL 2019/07/10
CHK'D: DNGUYEN62 2019/08/07
APPR: HKNEELAND 2020/05/19

INITIAL REVISION:
DRWN: PPURSUTANDEL 2019/07/10
APPR: HKNEELAND 2020/05/19

THIRD ANGLE PROJECTION | DRAWING: B-SIZE | SERIES: 130146

molex

WATERTITE CORDSET
PLUG AND CONNECTOR WITH CORD

PRODUCT CUSTOMER DRAWING

DOCUMENT NUMBER	DOC TYPE	DOC PART	REVISION
1301460016	PSD	000	A

MATERIAL NUMBER	CUSTOMER	SHEET NUMBER
SEE TABLE	GENERAL MARKET	1 OF 1

FORMAT: master-lb-portrait
REVISION: H
DATE: 2018/01/18